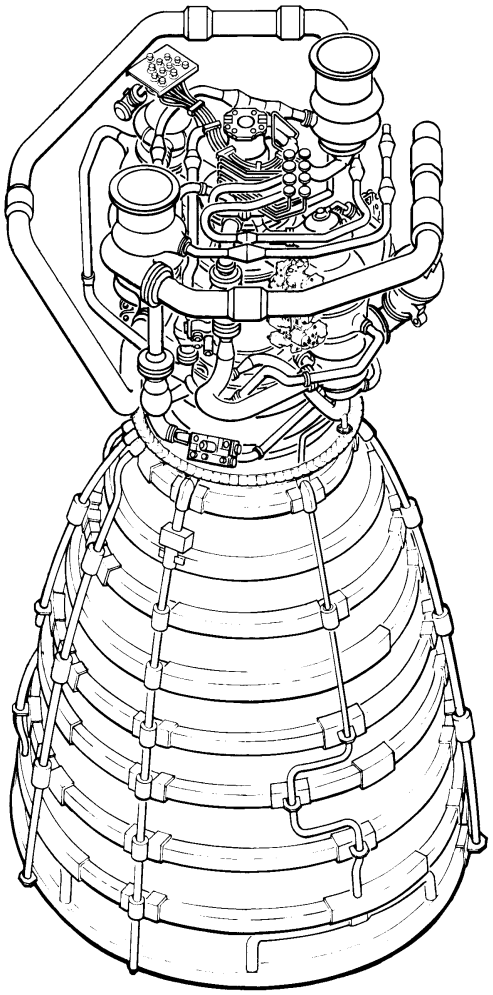

Columbia STS-107

Space Shuttle Program

SSME Flight Readiness Review

January 9, 2003

G. HOPSON
09 January 2003

Columbia STS-107

Agenda

- **Major Components**
- **First Flight ECP - Controller Coolant Duct**
- **Engine Performance**
- **Special Topic**
  - **STS-113 Nozzle Coldwall Leakage**
- **Material Review Reassessment**

Columbia STS-107

SSME Major Components

Engine	ME-1 / 2055 *Block II*	ME-2 / 2053 *Block II*	ME-3 / 2049 *Block II*
Last Hot-Fire	**902-830**	**STS-109**	**STS-108**
Powerhead	6022	6020	6019
Main Injector	6008	6020	6011
MCC	6024	6018	6015
Nozzle	2036	5006	4028
Controller	F50	F44	F41
HPFTP	8023	8026 (1)	8020R1 (1)
LPFTP	6007 (1)	5101	4210
HPOTP	8013R3	8031	8027 (1)
LPOTP	2227	2135	2133

(1) Changes after last hot-fire.

Controller Coolant Duct Redesign

ECP 1354

- **Issue**
  - Tight clearance where duct passes between the powerhead and the R0018052 line
  - Soft aluminum duct material susceptible to handling damage
- **Solution**
  - Redesigned duct using flexible silicone hoses and two nylon composite Selective Laser Sintered parts
  - Reduced parts count and maintained adequate clearance
- **Certification Status**
  - Certification by similarity and hot-fire
  - Total hot-fire time >29 starts / 17,030 seconds
  - VCR 586 Approved 10/22/01

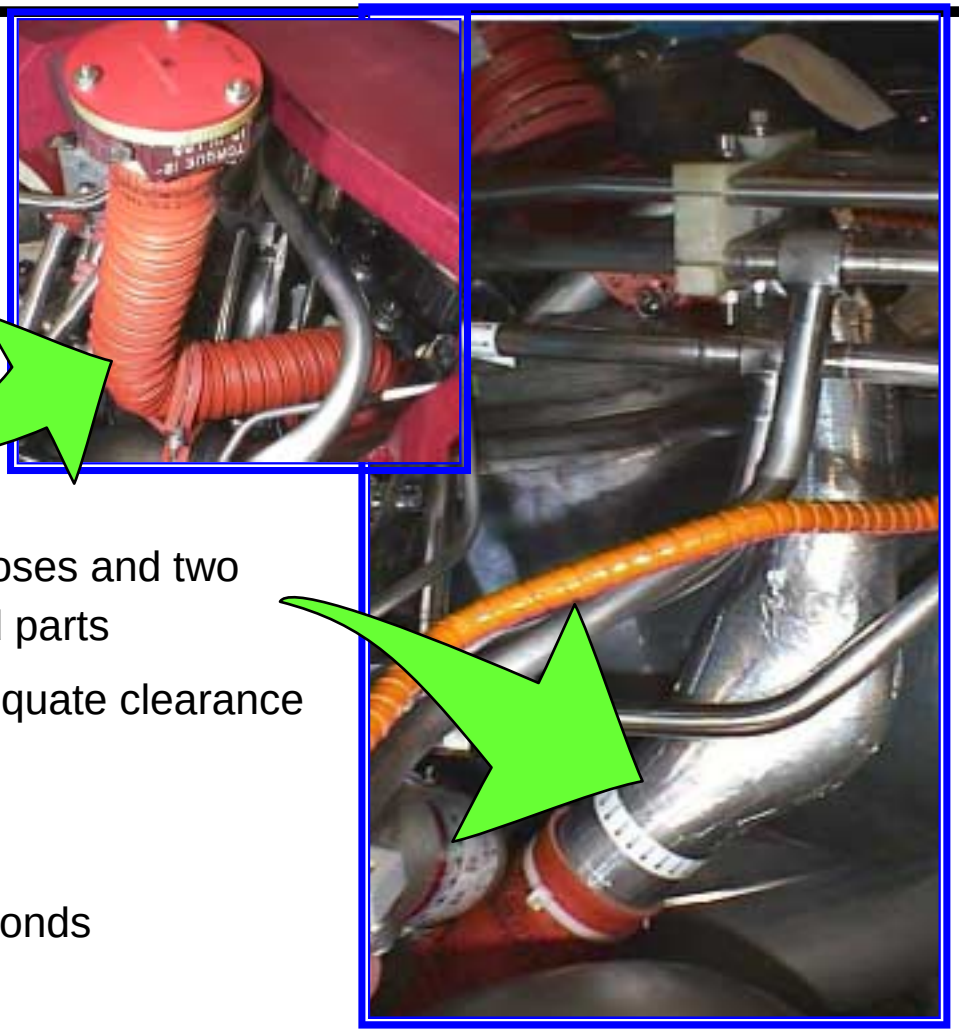

Columbia STS-107

Predicted SSME Ignition Confirm Margins

Parameter	Margin Sigma		
	ME-1 (2055)	ME-2 (2053)	ME-3 (2049)
HPFTP Minimum Speed	5.3	5.2	4.4
Min/Max Ignition Pc	4.8	5.1	4.0
Antiflood Valve Min Open	26.0	26.1	24.7
HPFTP Max Turbine Temp	3.9	4.7	4.3
HPOTP Max Turbine Temp	5.4	4.6	5.2
HPOTP Min Turbine Temp	7.2	9.2	8.3
Preburner Max Purge Pressure	29.5	29.1	28.9
POGO GOX Min/Max Pressure	4.2	3.3	4.1

Columbia STS-107

Predicted SSME Performance at 104.5% P.L.

Parameter	ME-1 (2055) Sigma	ME-2 (2053) Sigma	ME-3 (2049) Sigma
HPFT Disch Temp A, Deg R	1.1	-0.1	0.5
HPFT Disch Temp B, Deg R	-0.3	-0.8	0.5
HPOT Disch Temp A, Deg R	0.6	1.3	1.0
HPOT Disch Temp B, Deg R	1.2	1.3	0.3
HEX Interface Temp, Deg R	1.2	1.7	0.7
HPFTP Speed, rpm	-0.1	1.0	1.0
LPFTP Speed, rpm	0.0	-0.8	-1.2
HPOTP Speed, rpm	-0.1	-0.2	0.4
LPOTP Speed, rpm	0.2	-1.0	1.2
OPOV Position, %	1.5	0.6	0.8
FPOV Position, %	1.0	-1.3	**a** **[-2.1]**
PBP Disch Pressure, psia	-0.4	-1.1	0.6
HPFTP Disch Pressure, psia	0.7	0.3	-0.1
HPOTP Disch Pressure, psia	1.2	-1.8	-0.5
HPFTP U/N	8023	* 8026	* 8020R1
LPFTP U/N	* 6007	5101	4210
HPOTP U/N	8013R3	8031	* 8027
LPOTP U/N	2227	2135	2133

* Change from last flight / acceptance test

[] Exceeds database two sigma

a High efficiency HPFT

Columbia STS-107

Predicted Redline Margins at 104.5% P.L.

Parameter	Margin Sigma		
	ME-1 (2055)	ME-2 (2053)	ME-3 (2049)
HPFT Discharge Temp ChA, Deg R	5.9	6.9	6.4
HPFT Discharge Temp ChB, Deg R	6.8	7.2	6.1
HPOT Discharge Temp ChA, Deg R	7.1	6.6	6.7
HPOT Discharge Temp ChB, Deg R	7.6	7.6	8.4
HPOT Discharge Temp ChA, Deg R	7.5	6.8	6.5
HPOT Discharge Temp ChB, Deg R	8.3	7.2	6.6
HPOTP IMSL Purge Pr, psia	10.1	4.1	4.5
Low MCC Pc, psid			
Command-ChA Avg	21.9	19.6	21.5
Command-ChB Avg	24.1	24.1	24.7
FASCOS			
HPFTP	8.7	8.6	8.2
HPOTP	32.3	29.7	32.3

STS-113 Nozzle Coldwall Leakage

- **Issue**
  - STS-113 launch video footage shows an external flame near aft end of ME-1
- **Background**
  - Flame in an area of previously documented aft manifold leakage
    - Within allowable spec requirements
      - Total leakage < .015 lbm/sec
  - Leakage remained small throughout flight
    - No perceptible impact on engine performance during flight
  - Nozzle 5007 Hot Fire History
    - 6 starts / 3083 seconds

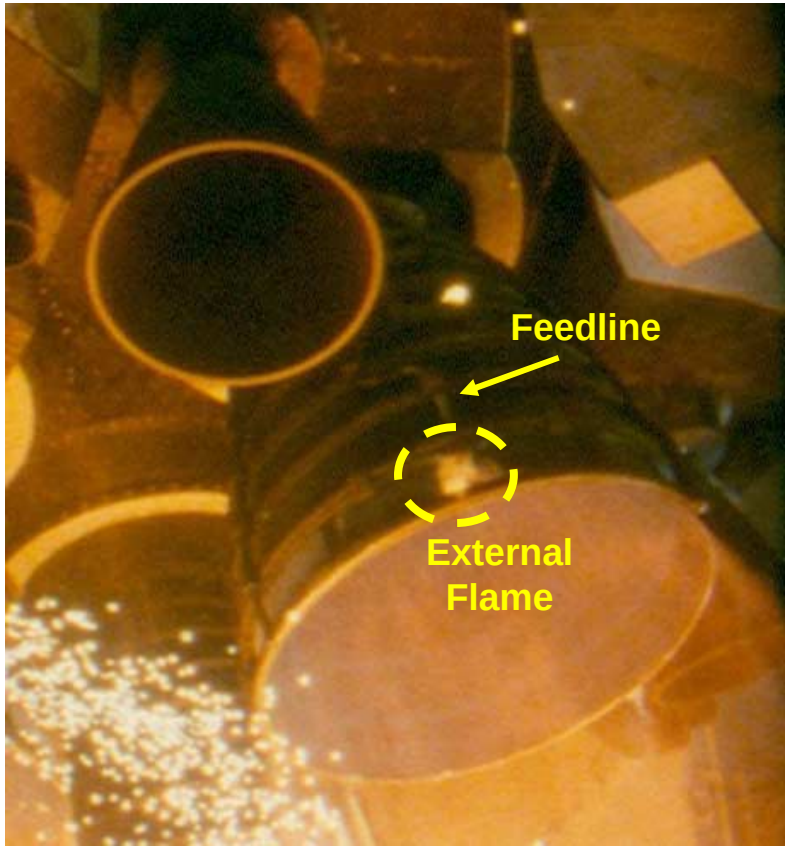

STS-113 Nozzle Coldwall Leakage

Assessment

- **Nozzle tube leakage monitored via standard post flight inspections**
  - Allowable leakage based on extensive hot fire experience and controlled by specification
    - Total leakage amount
    - Location and concentration of leaks within given area
- **Small coldwall leakage fires have negligible impact on nozzle**
  - Aspirated by the exhaust plume
    - Extinguished at ~ 50 seconds into flight (oxygen depletion)
  - Pressure vessels in vicinity of flame actively cooled by fuel flow
  - Non-cooled structures protected by insulation (TPS)
    - Designed for high temperature environments
- **External flames have been noted on prior flights with no resulting hardware damage or engine performance impact (STS-44 and –53)**

STS-113 Nozzle Coldwall Leakage

Post Flight Inspection Results

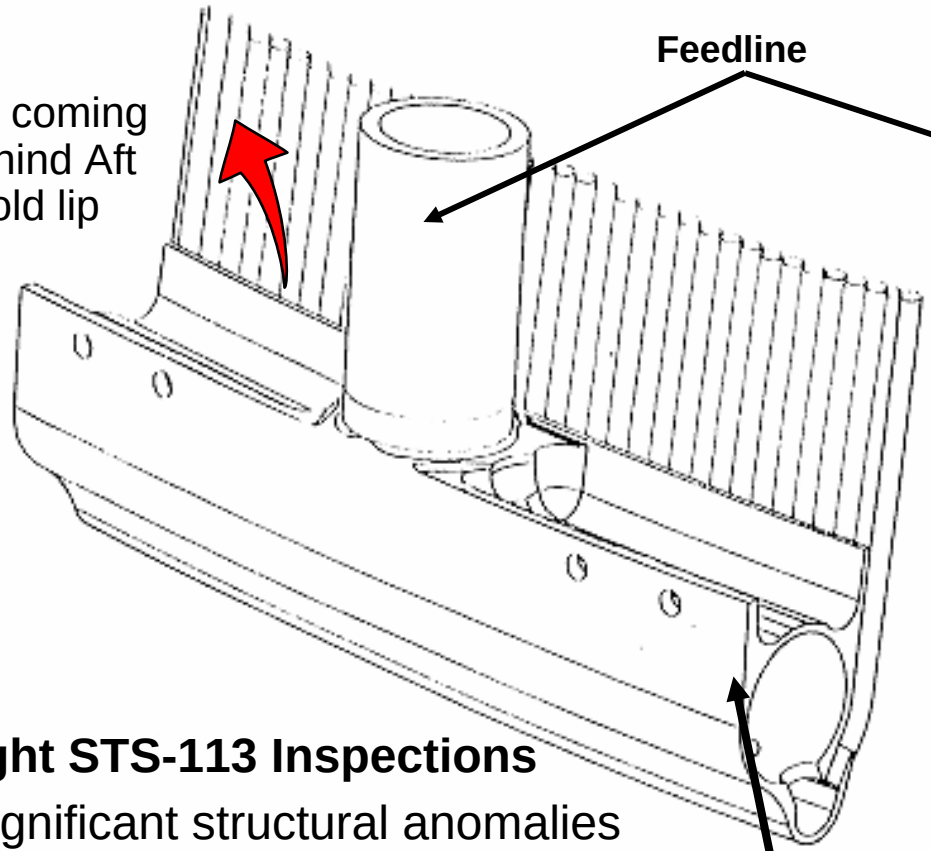

- **Post Flight STS-113 Inspections**
  - No significant structural anomalies
  - Leakage in excess of requirements
    - To be repaired per spec

STS-113 Nozzle Coldwall Leakage

- **STS-107 Rationale for Flight**
  - Small external fires caused by coldwall leakage are benign
    - Pressure vessels actively cooled
    - Non-cooled structures thermally protected by TPS
    - Supported by hot-fire experience – no anomalies
  - Coldwall leakage within specification well below levels necessary to negatively impact engine performance
  - STS-107 nozzles do not have coldwall leakage and do not have a history of coldwall leakage

Columbia STS-107

Material Review and Problem Report Reassessment

- **All Material Reviews and Problem Reports Reassessed**
  - Encompasses entire part / component histories
    - Fabrication
    - Assembly
    - Test
    - Flight
    - Recycle
  - Verified proper dispositions in light of current program sensitivities, knowledge and experience

- **All dispositions evaluated and judged acceptable for flight**

Columbia STS-107

SSME Certification of Flight Readiness

- **CoFR Exceptions**
  - None

Columbia STS-107

SSME Readiness Statement

- **The Columbia Main Engines are in a ready condition for STS-107**

G.D. Hopson	**J. S. Paulsen**
Manager	**Program Manager**
SSME Project	**Space Shuttle Main Engine**