BACKUP MATERIAL	Presenter: Robert Wright
	Organization/Date: USA-SRB/1-15-01

STS-98 (BI105) SPECIAL PRCB

Additional Information

BACKUP MATERIAL

Presenter:
Robert Wright
Organization/Date:
USA-SRB/1-15-01

STS-97 IFA Cable

- P/N 10400-0035-501, S/N 1000115, X13W26R, Lower Strut System "A"
  - Original failure - both conductors broken
  - 9 previous missions

Test Cable Failure History

- 10400-0050, X21W5R P2, S/N 1000018, Aft IEA end,
  - "C" bus power cable
  - 11 mission - spare pin
- 10400-0027-502, X13W12R P1, S/N 1000106, Aft IEA end,
  - TVC channel "D" Actuator
  - APU "B" MPU #2
  - 9 mission, pin 8, Tilt position lead "A", Benchtest 11/29/00

BACKUP MATERIAL

Presenter:
Robert Wright
Organization/Date:
USA-SRB/1-15-01

Test Cable Failure History

- 10400-0051-501, X21W101R P2, S/N 1000132, Aft IEA end
  - Data Bus #1 Igniter PIC volts
  - Chamber pressure "A"
  - 7 mission, pin 14, wired spare, benchtest 05/99
- 10400-0027-502, X13W12R P2, S/N 1000118
  - TVC channel "D" Actuator
  - APU "B" MPU #2
  - 8 mission, pin 14, wired spare, benchtest 09/09/00

STS-98 replaced and repaired

- 10400-0039-501, S/N 2000006, Upper Strut, replaced
- 10400-0036-501, S/N 1000100, Lower Strut, re-terminated
- 10400-0065-502, S/N 2000003, Forward Sep. bolt, replaced

BACKUP MATERIAL

Presenter: Robert Wright

Organization/Date: USA-SRB/1-15-01

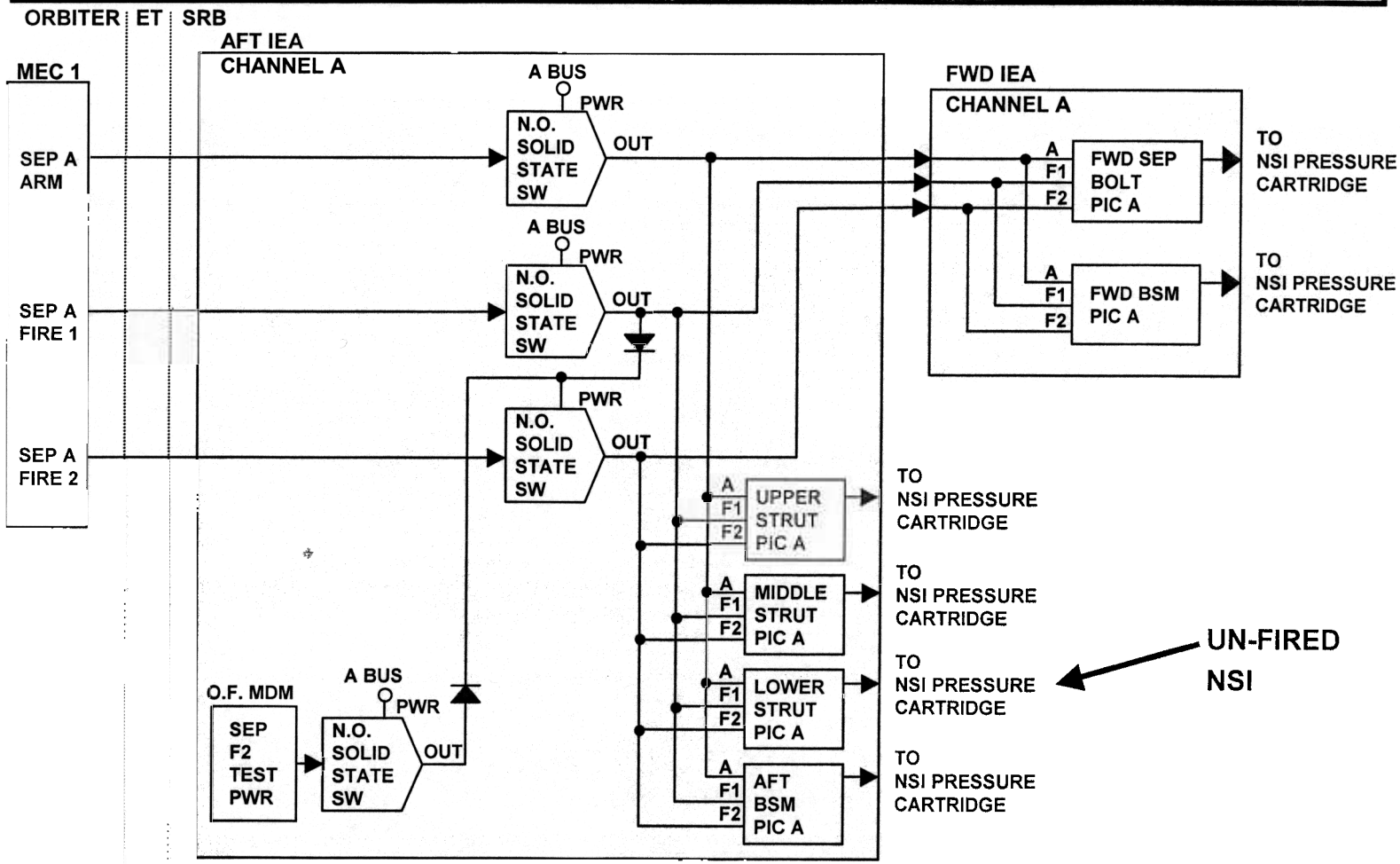

SRB ET SEPARATION SYSTEM

BACKUP MATERIAL

Presenter:
Robert Wright

Organization/Date:
USA-SRB/1-15-01

DIAGONAL AND LOWER STRUT

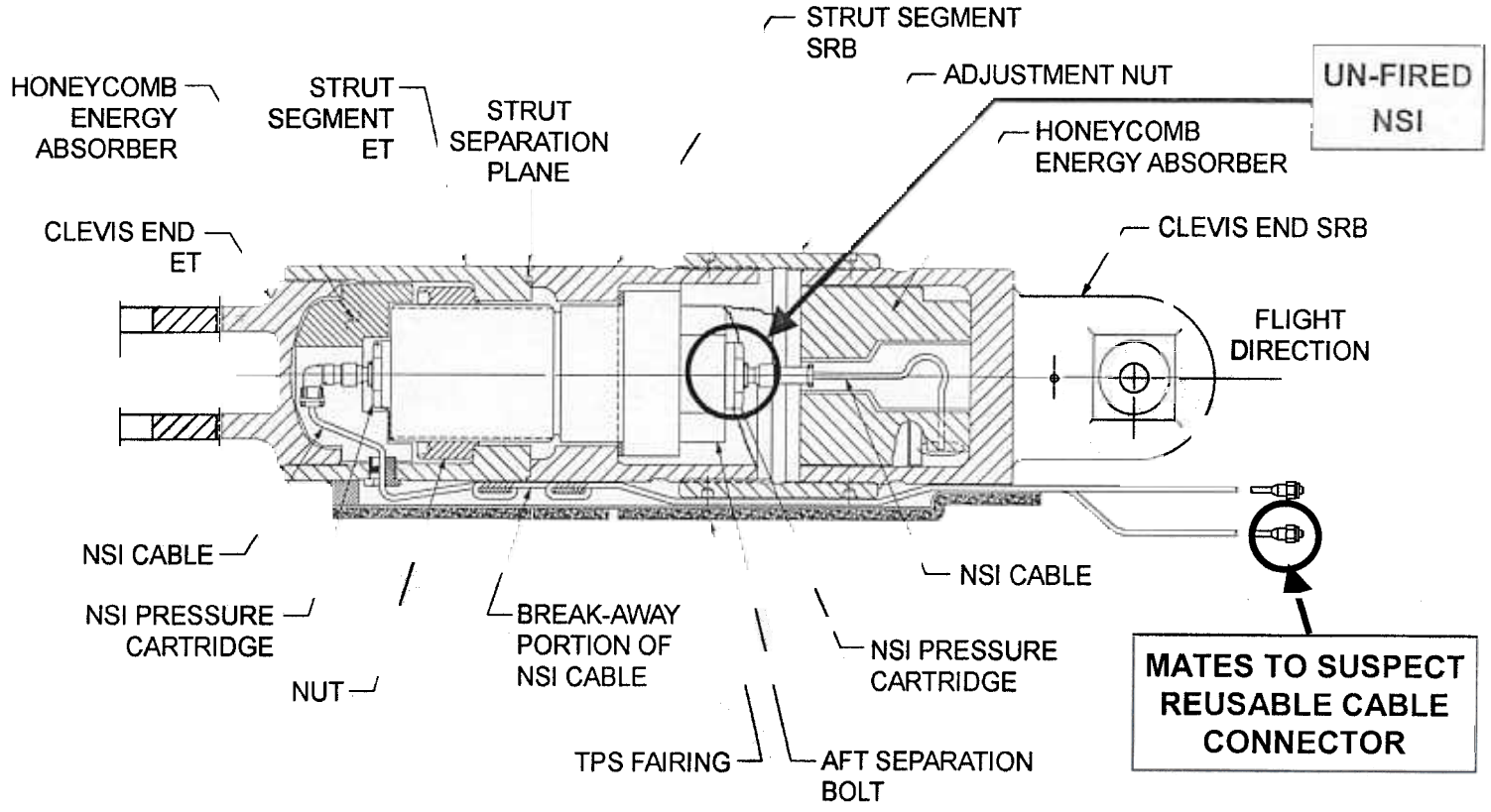

BACKUP MATERIAL

Presenter:
Robert Wright

Organization/Date:
USA-SRB/1-15-01

Sample Braid Repair and Re-termination of Cable

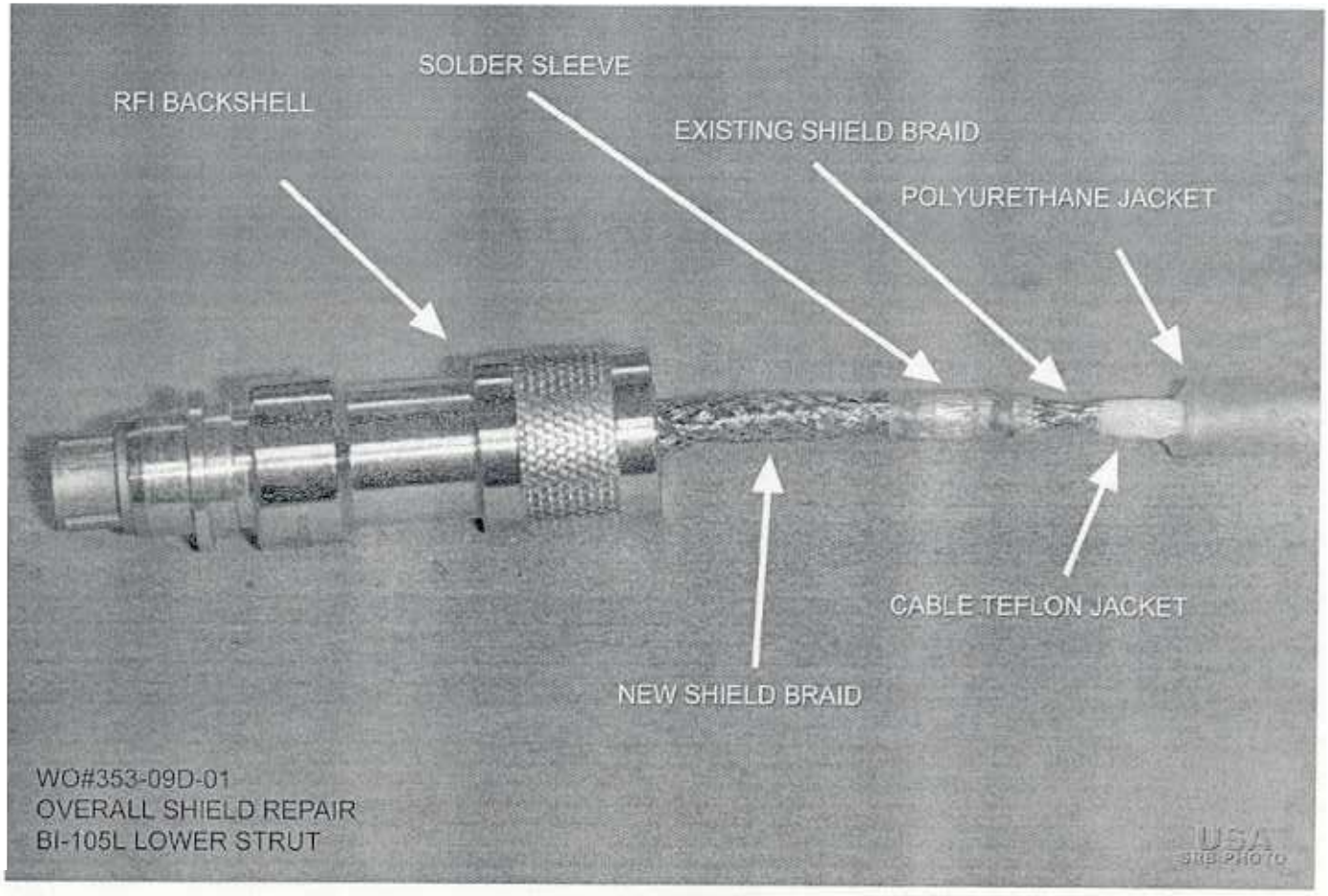

STS-98

United Space Alliance

BACKUP MATERIAL

Presenter: Robert Wright

Organization/Date: USA-SRB/1-15-01

Vibration test summary

- Vibration testing of two cables with similar age and mission count performed
  - Simulated handling damage to cables
    - Removed watertight jacket on one cable
    - Worked cables by hand until shield damage was noted
  - Vibration test of cables for simulation of 3 mission cycles
    - Vibrated cable in two axes, three separate times
    - Continuous DWV performed during vibration testing with no anomalies noted
    - Successfully passed Continuity, IR, DWV and wiggle tests
  - Performed vibration testing on 2 foot section of cable with similar shield repair as Option 1
    - Continuity, IR, DWV and wiggle tests completed with no anomalies noted

BACKUP MATERIAL

Presenter: Robert Wright

Organization/Date: USA-SRB/1-15-01

One Possible Cable "Kink" Theory

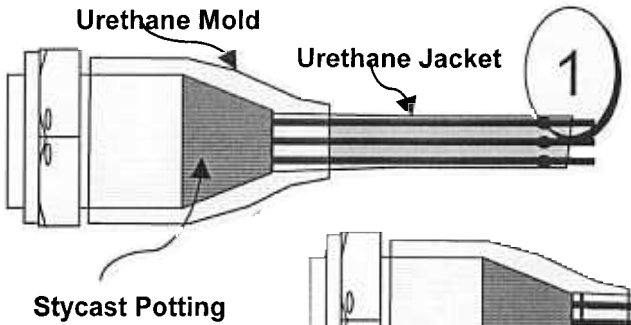

Stycast potting secures wires in connector. Twist in wires provides axial "coiling" during flexing.

- Some wires have limited "coiling" capability due to straightening near connector

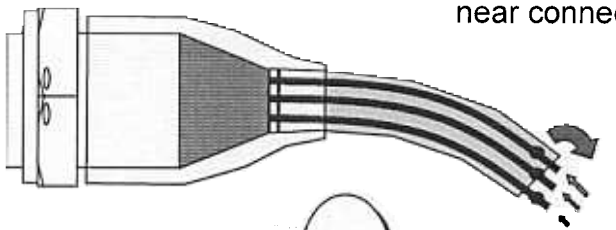

"Pulling on a Rope"

When flexed, wires pull through jacket toward connector

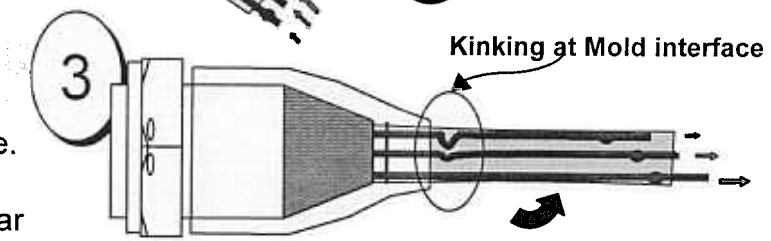

"Pushing on a Rope"

When straightened out, jacket resistance prevents wire from pushing back down cable. Outer wires kink due to columnar loads

- Wires without twist have less columnar strength and may kink more easily
- Wire geometry, proximity to resumption of twist, and other manufacturing variables factor into probability of kinking
- Cyclic loading at kink produces work hardening which may ultimately lead to fracture

- Position Reference Mark *(for illustration purposes only)*

STS-98

United Space Alliance

BACKUP MATERIAL

Presenter:
Robert Wright

Organization/Date:
USA-SRB/1-15-01

STS-98 System Tunnel Cables

Mission count

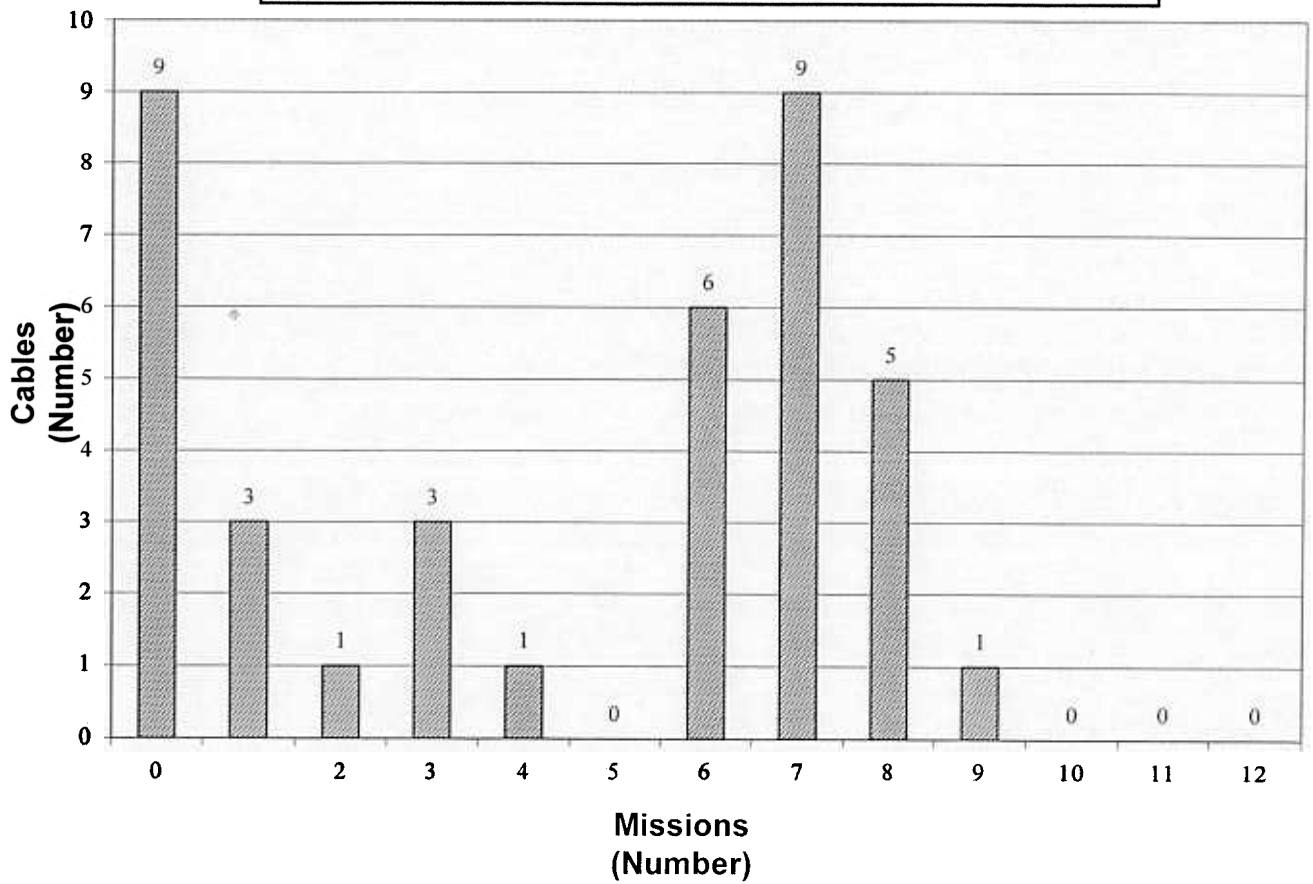

United Space Alliance

BACKUP MATERIAL	Presenter: Robert Wright
	Organization/Date: USA-SRB/1-15-01

STS-98 System Tunnel Cables Age

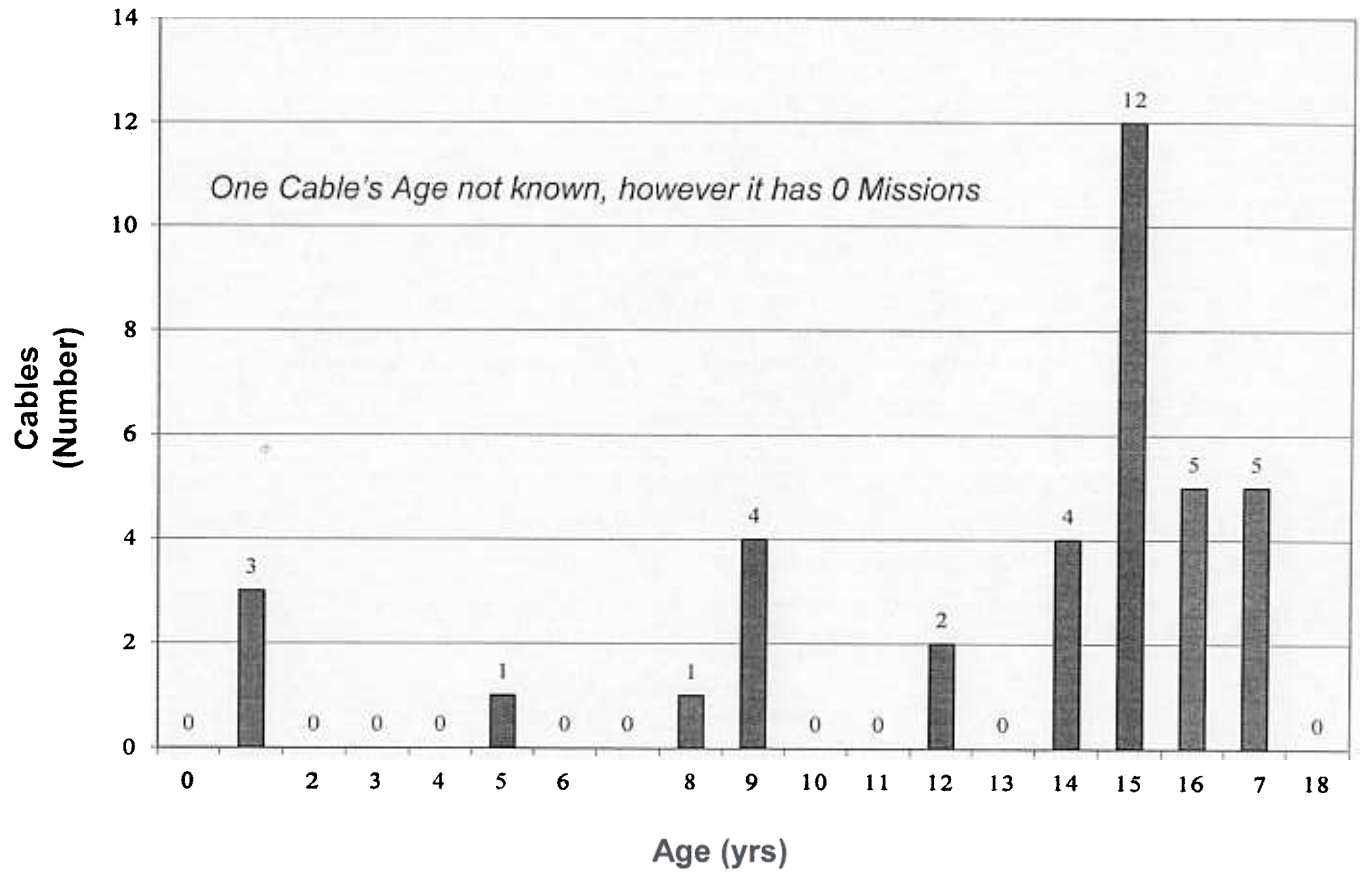

United Space Alliance

BACKUP MATERIAL

Presenter:
Robert Wright

Organization/Date:
USA-SRB/1-15-01

STS-98 System Tunnel Cables
Mission count

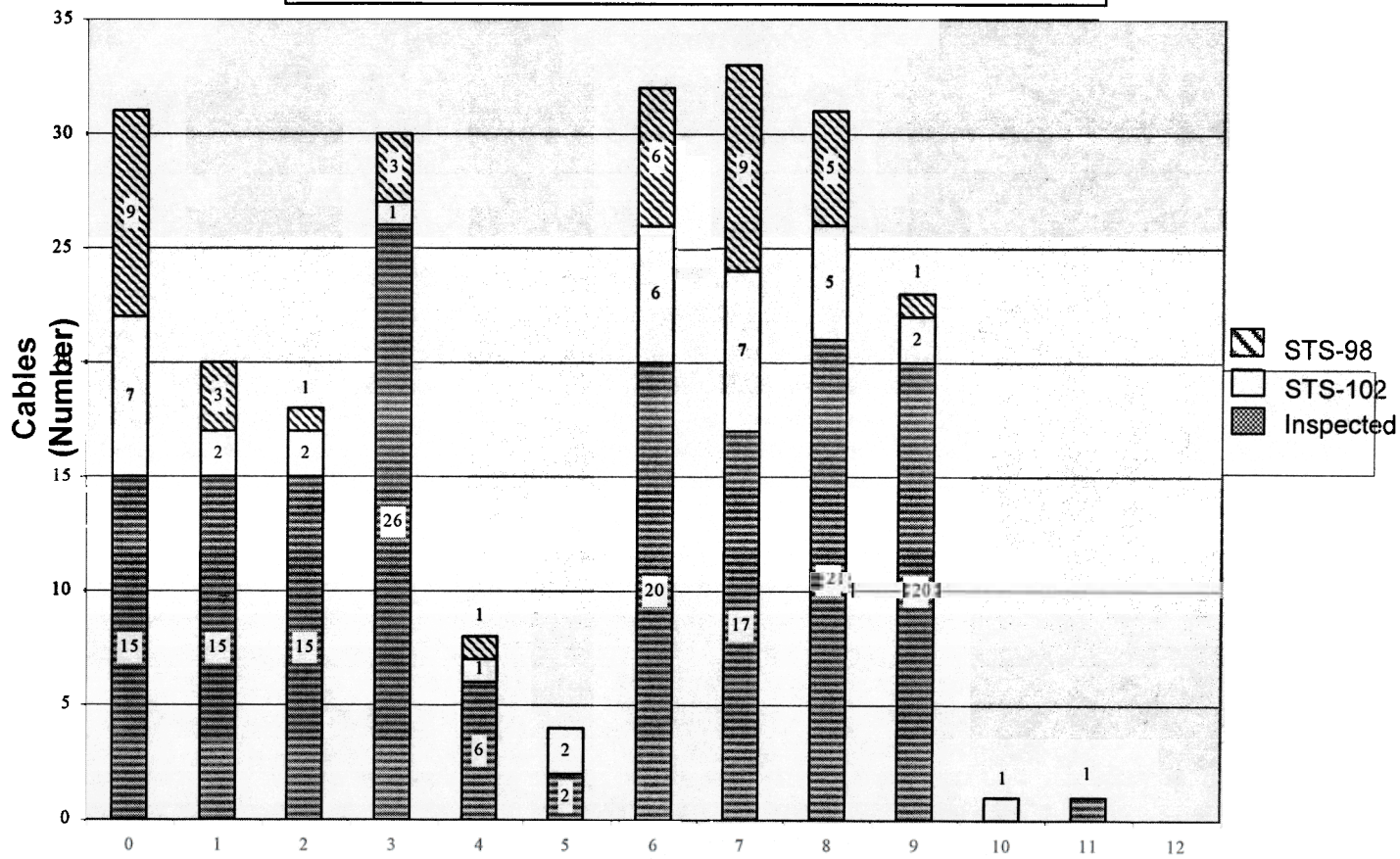

United Space Alliance

BACKUP MATERIAL

Presenter: Robert Wright

Organization/Date: USA-SRB/1-15-01

SRB Systems Tunnel Cable

P/N: 10400-0050 SN: 1000018
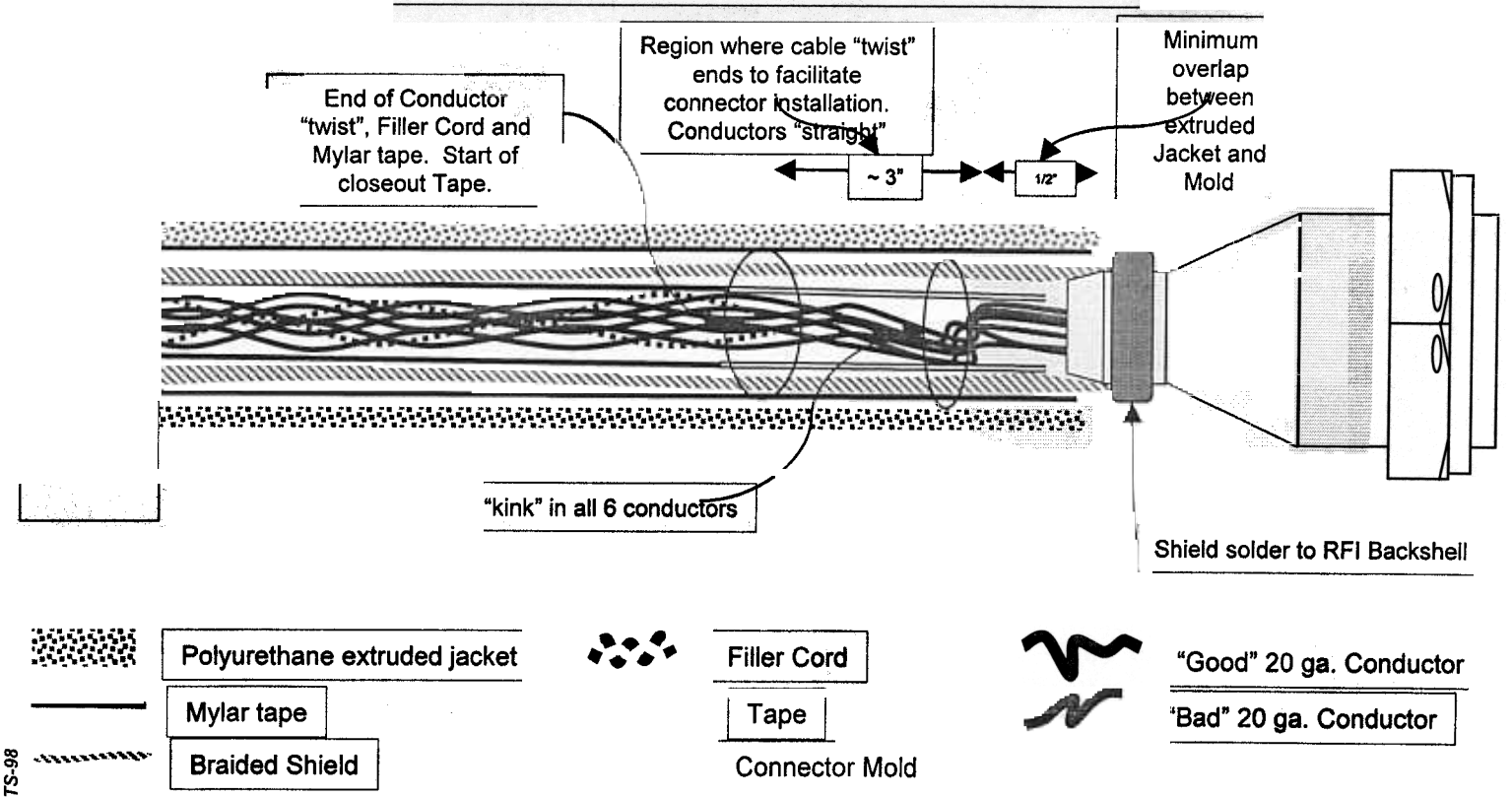
Failure Analysis findings Schematic