TASK: P759829

WK PKG: PR ET-093-ST-0018
ENG GRP: ETM
TSK LDR:

FLOC: VAB
MLOC: ET-93
STS/FLT: 107 /001

TITLE: SHIMS DO NOT MEET GAP REQUUIREMENTS ON AFT FAIRINGS

OPERATIONS LIST

NUMBER TaskBarCode	TITLE	OperationBarCode	DEPT/SHOP
10	SHIMS DO NOT MEET GAP REQUUIREMENTS ON AFT FAIRINGS		
20	SHIMS DO NOT MEET GAP REQUUIREMENTS ON AFT FAIRINGS		53700 SCH

P739829

National Aeronautics and Space Administration
John F. Kennedy Space Center

1. Report Number
☐ Interim Problem Report
☒ Problem Report
☐ Discrepancy Report

PVG-393282

PAGE 1 OF 1

2. Detected During	3. Work Area/Location/Zone	4. End Item Control Number
RUN4 T1297.002	VAB HB1	ET-93-ST-0018

5. Part/Program Name	6. Part/Program Number	7. Serial/Rev No.
SHIMS	80911009124-007	NONE

8. NHA Part Number	9. STS/Eff	10. Reported by	11. Date/Time
MMS1104B525	107/T093	Tom Ford ZR5956 USA ETM TOM FORD 1-3354	11.14.02

12. Item	13. Problem Description
1.0	Shims do not meet gap requirements on aft fairings.

TPS/RSI Instl'd: ☐ Yes ☐ No C/P Instl'd: ☐ Yes ☐ No C/P Part Number:

14. Process Escape	15. Constraints	16. Crit	17. Eng Grp	18. MR Reqd	19. Out of Family
☐ Yes ☒ No	See CRR ☐ To: T1297.002 SEQ 20-4	H/W F/M I | III	ETM	☐ Yes ☒ No ITEMS:	☐ Yes ☒ No ITEMS:

20. Step	21. Disposition/Cause/Corrective Action	22. Tech	Contr	Govt
1.0	Peel Shim Per Attachment 1.0			
	SUMMARY CLOSURE: Shims WOULDN'T INSTAL They were Peeled Per Standard Procedures No Further Rework. NO RC ACTION CAUSE: Process Tolerance	11/15/02		
2.0	Close This PR		QW 11/18/02	
	Richards ① 11-14-02			
	11-14-02			

USA VM 032

USA VM 026

AST 057 USA

USA VM 043

23. Data Code	24. Final Acceptance Date
T08A04 . . 853 NOV 26 2002	11/18/02

25. RC Action Reqd	26. Related Reports
☐ Yes ☑ No ITEMS:	:

USA VM 081 JAN 02 2003

KSC FORM 2-152 (REV. 8/01)

ORIGINAL

Authorizing Document: ET-093-ST-0015 Attachment No.: 1

SHIM PEELING, AFT FAIRINGS

Procedure Number: ET-120-015
Version: 1.0 Approval Date: 11/06/2001

APPROVED IPP

Applicability and Limitations:

Applicability:
This IPP is used to peel the 8091101924-007 shim (s) to allow for proper installation of 80911019124-009 bracket on the Aft Fairing.

Limitations:

Use this IPP only for the 80911019124-007 shim in the installation of the 80911019124-009 bracket.
This procedure is used only for discrepancies that are within the requirements of the current PR / DR process.

Richards 11-14-02
11-14-02

Approved By: BREWER,RAYMOND ETM 11/06/2001

Hazard Level: Non-Hazardous

Referenced Engineering Documentation:

Dwg/Doc No.	Rev	Title
80911019139	LI	Fairing Installation, ET / SRB upper / Aft
80911009130	LI	Fairing Kit, ET / SRB Aft
80901019010	LI	ET Post Build Acceptance / Process Rework Manual

Parts, Materials, Equipment and Tools:

Part No./Find No.	Nomenclature	Qty
80911009124-009	Support Bracket, Fairing	
80911009124-007	Shim	
80911009124-008	Filler	

Personnel Protective Equipment:

Nomenclature
None

Critical Skill Requirements:

Number	Course Title
N/A	N/A

11-14-02

11-14-02 AST 057 USA

Approved By: BREWER,RAYMOND ETM 11/06/2001

Authorizing Document: ET-093-ST-0016 Attachment No.: 1

SHIM PEELING, AFT FAIRINGS
Procedure Number: ET-120-015 **Version:** 1.0 **Date:** 11/06/2001

Instructions:

NOTE

The following steps will obtain shims and filler along with a fairing support to perform a fit check to the ET /SRB fitting assembly on the Aft Fairing. Clearance measurements will be taken to verify drawing requirements. After fit check, these items will be removed and retained for future installation.

11-14-02

11-14-02 AST 057 USA

Approved By: BREWER,RAYMOND ETM 11/06/2001

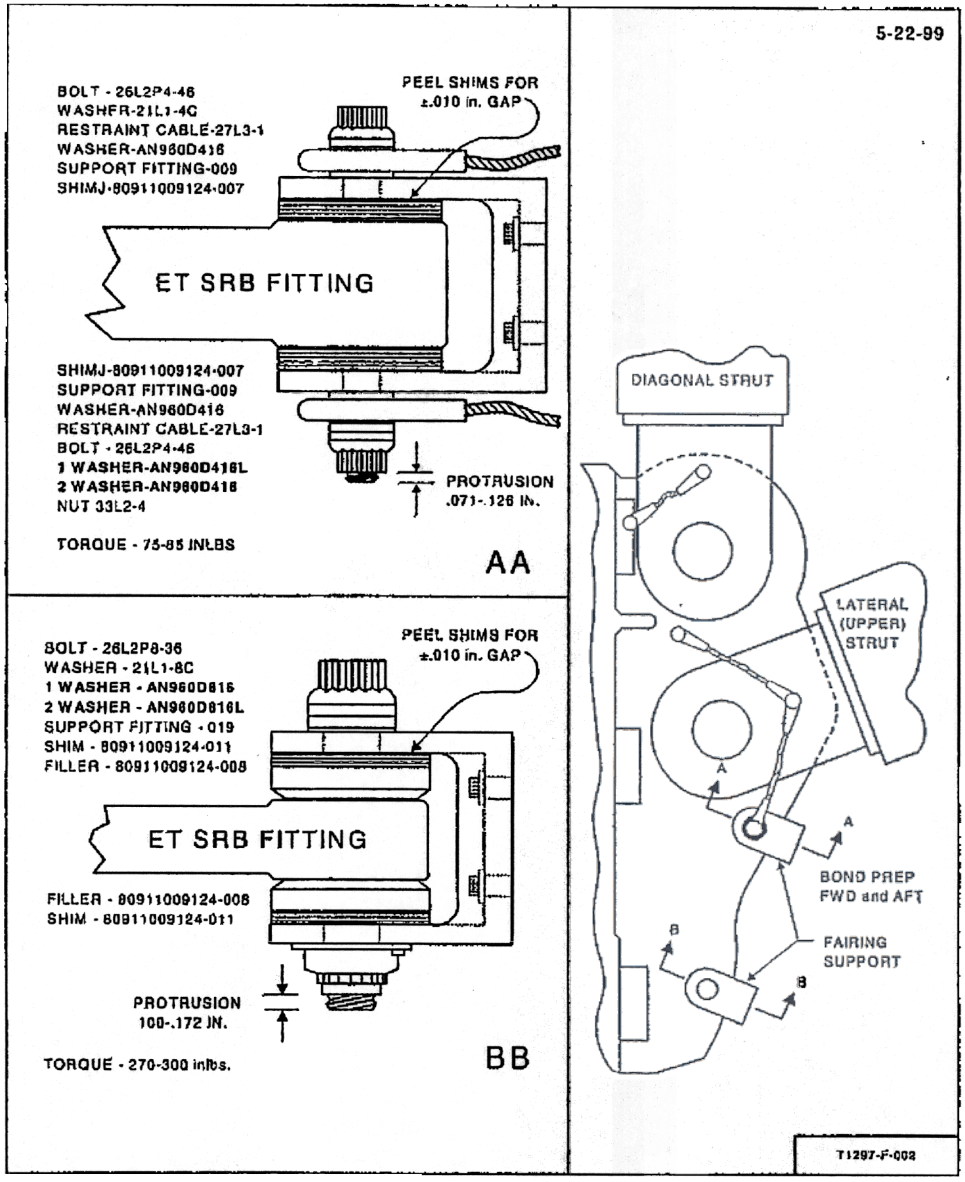

FIGURE 2 - ET/SRB UPPER AFT FITTING ASSEMBLY AND FAIRING SUPPORTS
(-Y SIDE SHOWN, VIEWED FROM AFT SIDE) (+Y SIDE OPPOSITE)
(FOR REFERENCE ONLY)

11-14-02
11-14-02 AST 057 USA

Approved By: BREWER,RAYMOND ETM 11/06/2001

10-1 **Obtain** 80911009124-007 shims.

0394 T:

NOV 14 '02

10-2 **Fit check** 80911009124-~~019~~ 09 fairing support as follows:

1. • **Position** 80911009124-009 fairing support at mounting location on ET/SRB fitting assembly.
   Install 80911009124-007 shim between fairing support and top and bottom surfaces of ET/SRB fitting assembly (see figure 2, section B-B).
   If shims require peeling to fit and provide a 0.010 or less clearance

	Verification +Y	Verification -Y
Then Peel (2) 80911009124-007 shim(s) to have a clearance of less than 0.010 inch.	☑	☑
Else Proceed to next substep.	☐	☐

2. **Record** total thickness and number of shims used:

	+Y	-Y
Number of shims used	2	2
Total thickness	~~.226~~ .312	~~.218~~ .321 Inch

   Error 11/14/02

3. • **Align** mounting holes
   • **Insert** (1) 26L2P4-46 External wrenching bolt through fairing support, shims, fillers, and fitting assembly.
   Thread bolt into (1) 3312-4 nut and tighten finger tight.

0394

11-14-02

11-14-02

Approved By: BREWER,RAYMOND ETM 11/06/2001

AST 057 USA

4. • **Hold** bottom side of fairing support tight against bottom side shim, filler, and ET/SRB fitting assembly to eliminate clearance
   • **Measure** maximum clearance between top of shim and inner surface of fairing support clevis (see figure 2, section B-B)

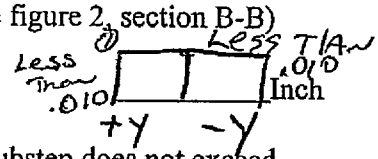

5. **Verify** clearance recorded in the previous substep does not exceed 0.010 inch.
6. **Remove** bolt, fairing support, nuts and shims from ET/SRB fitting Assembly.

① +Y T: 0396 11/14/02
② -Y T: 0396 11/14/02

10-3 **Retain** removed hardware for installation per OMI T1297.

T: 0396 11-14-02

End of Attachment

Richards
11-14-02 ① 3 places
11-14-02

Approved By: BREWER,RAYMOND ETM 1/06/2001