Biofuels and Modern Aicrafts

New Technical Solutions For Their Effective Interaction

Piera Carugno

ESA Sponsored Student

Master in Aeronautical Engineering

SAPIENZA
UNIVERSITÀ DI ROMA

CONTENTS

- Jet fuel: what is it? What is the actual scenario?

- General overview and the "cause-effect" relation

- The state of the art today.

- New alternatives: prantdlplane, all electric aircraft and... Biofuels!

- Introducing the New Technical Solutions

- Designing a timeline of innovation

- Fuel equipment: new challenges

- How to defeat the biofuels' inner structure related problems

- Turbulence: exploiting positive aspects

- A turning point in the combustion chamber technology

- A drastic change: a totally new aircraft structure?

- Not just a mere question of time

- Conclusions and future prospectives

What is jet fuel?

Jet fuel is a type of **aviation fuel** designed for use in aircraft powered by gas-turbine engines.
The most commonly used fuels for commercial aviation are Jet A and Jet A-1 which are produced to a standardised international specification.

JET FUEL USAGE UNTIL NOW

Request of higher performances

+

Growth of air traffic

↓

Continuos request of fuel

+

Rise of price $/gallon of crude oil

↓

Increase of ***Greenhouse Gases' emissions***

+

Peak of maximum production very close

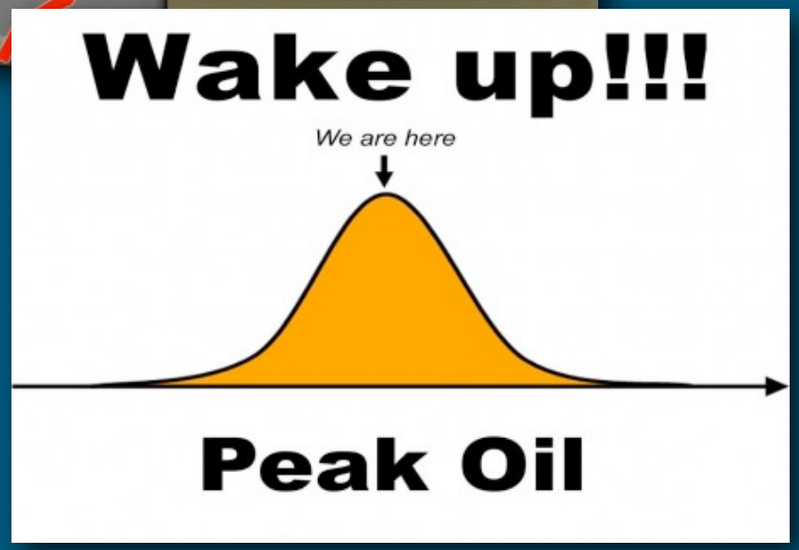

One clear objective:

To *mitigate the risk of pollution* - given by the GHG emissions - and to set ourselves free from the huge *consumption of carbon-derivated fuel* experienced today.

We have to think about alternatives for air transportation systems

THERE ARE MANY SOLUTIONS AVAILABLE TODAY:

Prandtlplane

All electric aircraft

Usage of Biofuels

We have to think about alternatives for air transportation systems

THERE ARE MANY SOLU
AVAILABLE TO

Prandtlplane

ASTM Standard d7566 has approved the usage of blended jet-bio-fuels up to 50% of biologic components in June 2011. We need a more massive usage of biofuels!

!

Usage of Biofuels

Biofuels: Pros & Cons

- Use **untapped energy sources**
- Energy for **many decades**
- Derivation from **renewable energy sources** (cooked oil, algae, biomasses)
- Potential growth of energy sources in **many countries** (Brazil, USA...)
- **Lower price $/gallon** due to extreme modern product
- **Best choice to reduce GHG emissions** and **reduce engine** noise too
- **Same test benches** as the ones for jet-fuel

One important formula for one cons…

Density = Mass / Volume

For a fixed value of the mass:
lower density implies bigger volume

For a fixed value of the volume:
lower density implies lower mass

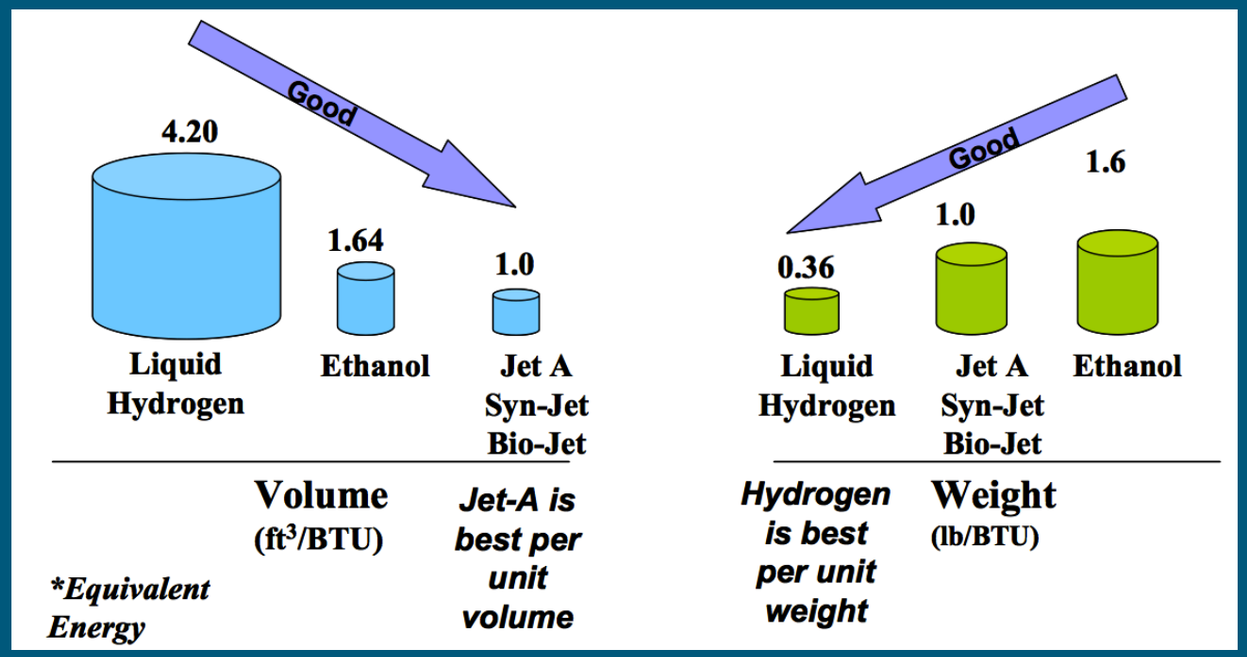

← LH2-fueled aircraft

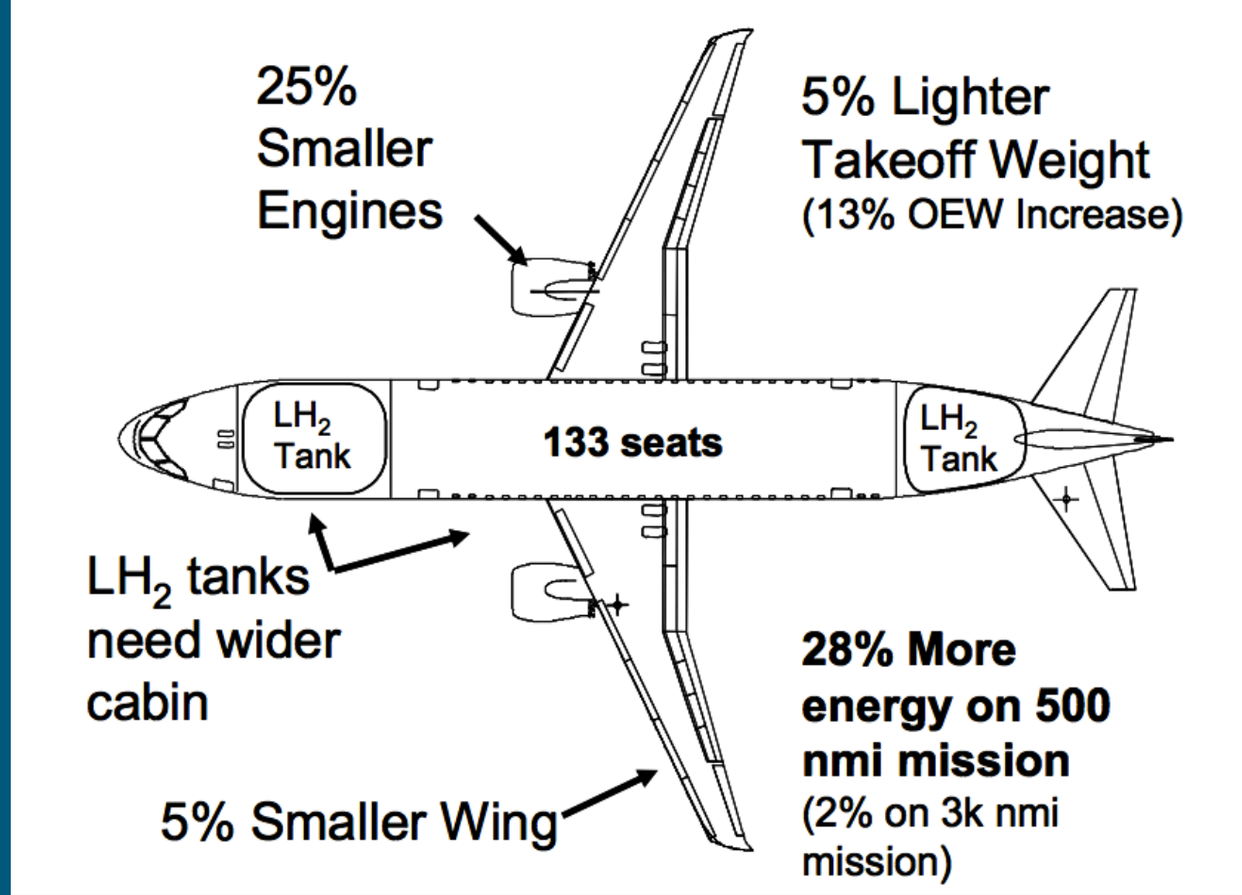

Ethanol-fueled aircraft →

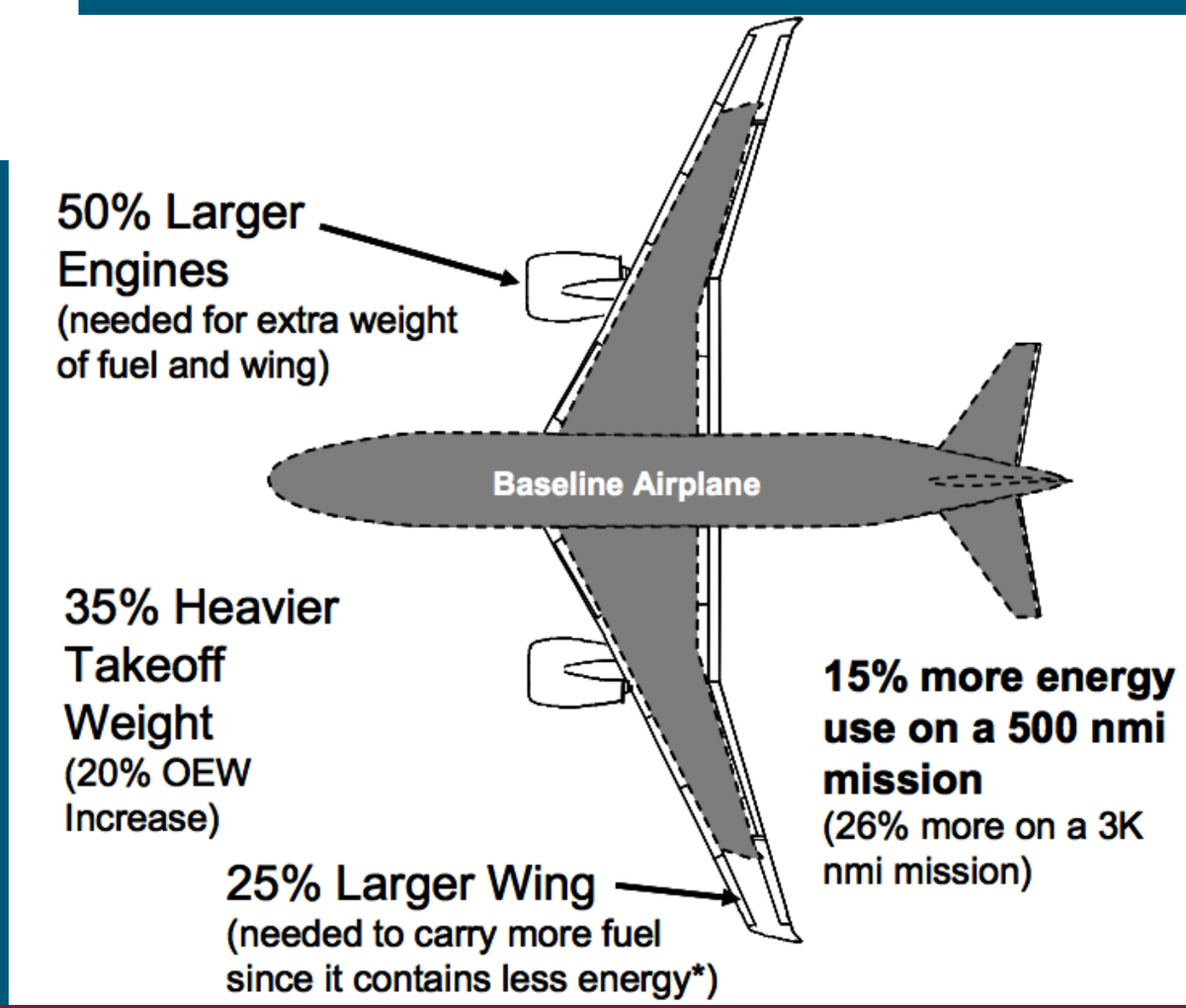

Other important problems...

- *Lower volumetric heat content*
- Problems of *pressure* level
- Possible shortage of feedstocks to produce enough biofuel (der. by biomasses)
- Logistical and storage problems due to *lower densities*
- *Propensity to freeze at normal operating cruise* (alcohol derivated fuels)
- In some cases:

energy produced / energy needed to product < 1

...In a few words:

PROBLEM:
Too much Jet-Fuel used

Environmental and economical issues

ONE POSSIBLE SOLUTION:
Usage of biofuels

2nd generation biofuels: more competitive

PROS & CONS:
Are biofuels a total benefit?

No, it is necessary to analyse the negative aspects of its usage and the possible technical improvements to do

TECHNICAL SOLUTIONS:
New technologies have to be explored to let biofuels interact with modern aircrafts

Necessity to design a timeline in order to work step step towards the best solutions to implement

TOWARDS THE FUTURE...

...A PROSPECTIVE TIMELINE OF INNOVATION

- Modification of the fuel equipment
- Turbulent mixing injectors
- Blended-wing-body aircraft structure

TOWARDS THE FUTURE...

...A PROSPECTIVE TIMELINE OF INNOVATION

A

- Modification of the fuel equipment
- Turbulent mixing injectors
- Blended-wing-body aircraft structure

Due to biofuels' inner structure!

PROBLEMS

- Tendency to freeze at normal operating cruise temperatures
- Pressure problems
- Lower densities (if compared with conventional Jet-Fuel)
- Logistic problems

TARGETS

- Avoid freezing temperatures
- Electronic control of the pressure and injection
- Limit weight of biofuels' tanks
- Fast and safe connection to the fuel main manifold

THE A.B.C.: Additional Biofuel Container

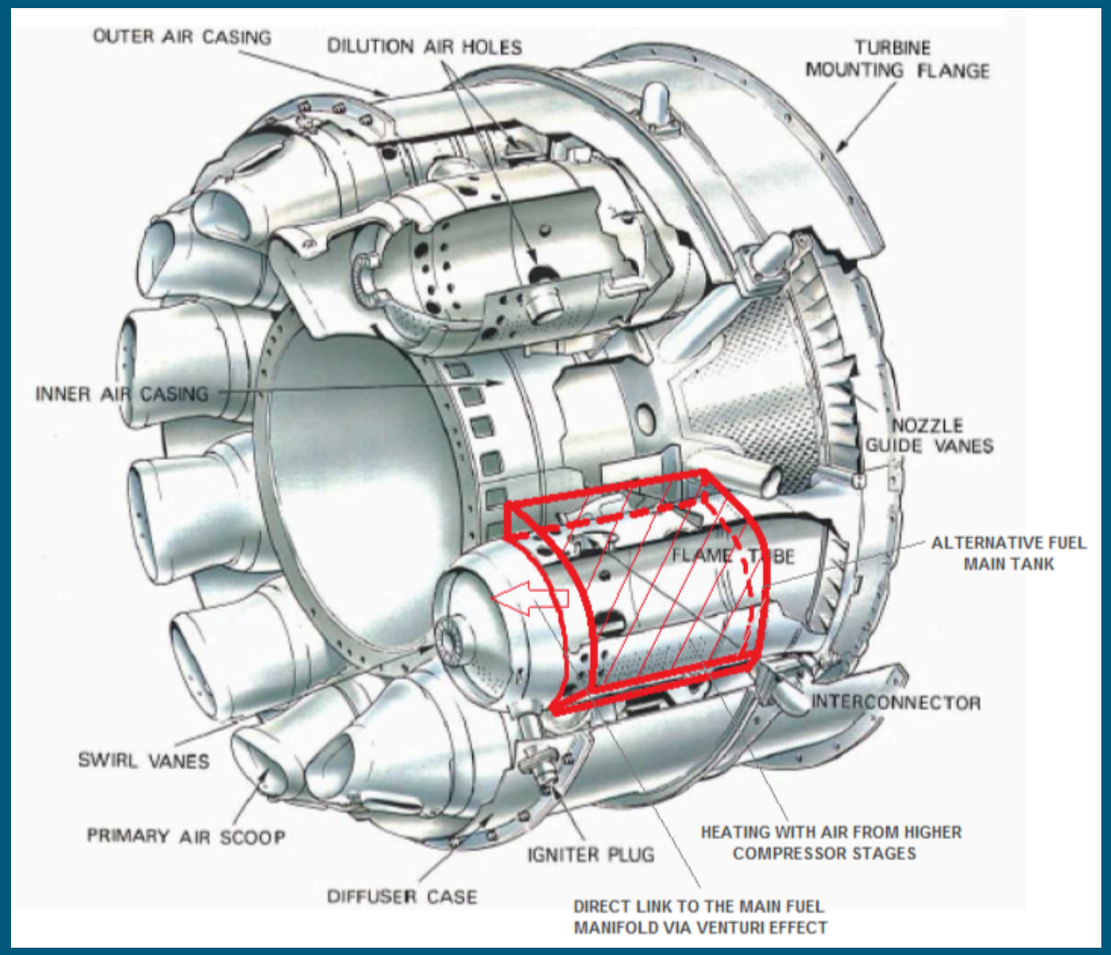

-Heating via air coming from an air-intake or from higher compressor stages

- Direct link with the fuel main manifold via Venturi effect

- Usage of biofuels during cruise time whilst usage of jet-fuel during approaching and taking off manoeuvres

KEY CONCEPT: we cannot suddenly switch from jet to biofuel in modern engines. We need a *smooth* passage. We still have to use the jet-fuel.

RESULTS:

IT ENHANCES:

Engine's weight
Link to the c.c.

IT AVOIDS:

Turbopumps
Heavy biofuels' tanks
Long paths to reach the fuel main manifold

IT LETS:

The biofuels do a *first important step* towards their integration, without upsetting the whole engine's structure

New challenges...?

Materials science

New challenges have to be faced:

Safety issues

Flame stability in the c.c.

Effective economical revenue

TOWARDS THE FUTURE...

...A PROSPECTIVE TIMELINE OF INNOVATION

Modification of the fuel equipment

B

Turbulent mixing injectors

Blended-wing-body aircraft structure

What is turbulence?

Turbulence is a flow regime characterised by chaotic and stochastic property changes. Turbulence is highly associated with ***rapid mixing***. One of the useful effects of turbulence, it tends to ***accelerate the homogenisation*** of any non-uniform fluid mixture. When flow is turbulent, particles exhibit additional transverse motion which ***enhances the rate of energy*** and momentum exchange between them thus ***increasing the heat transfer***.

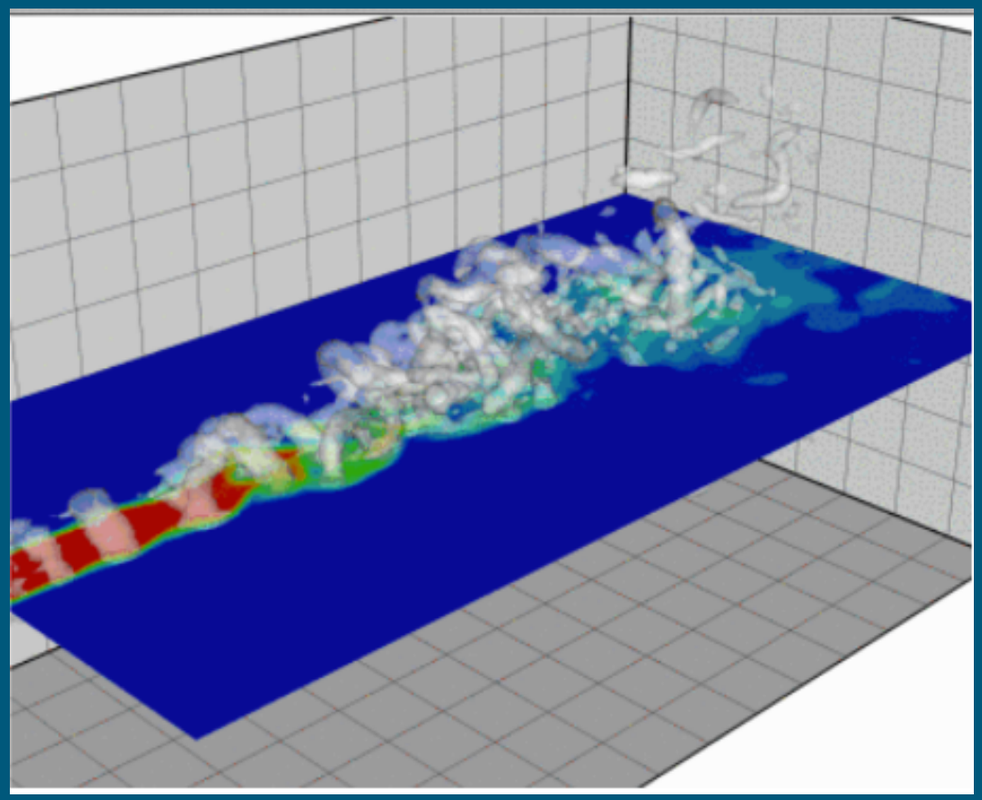

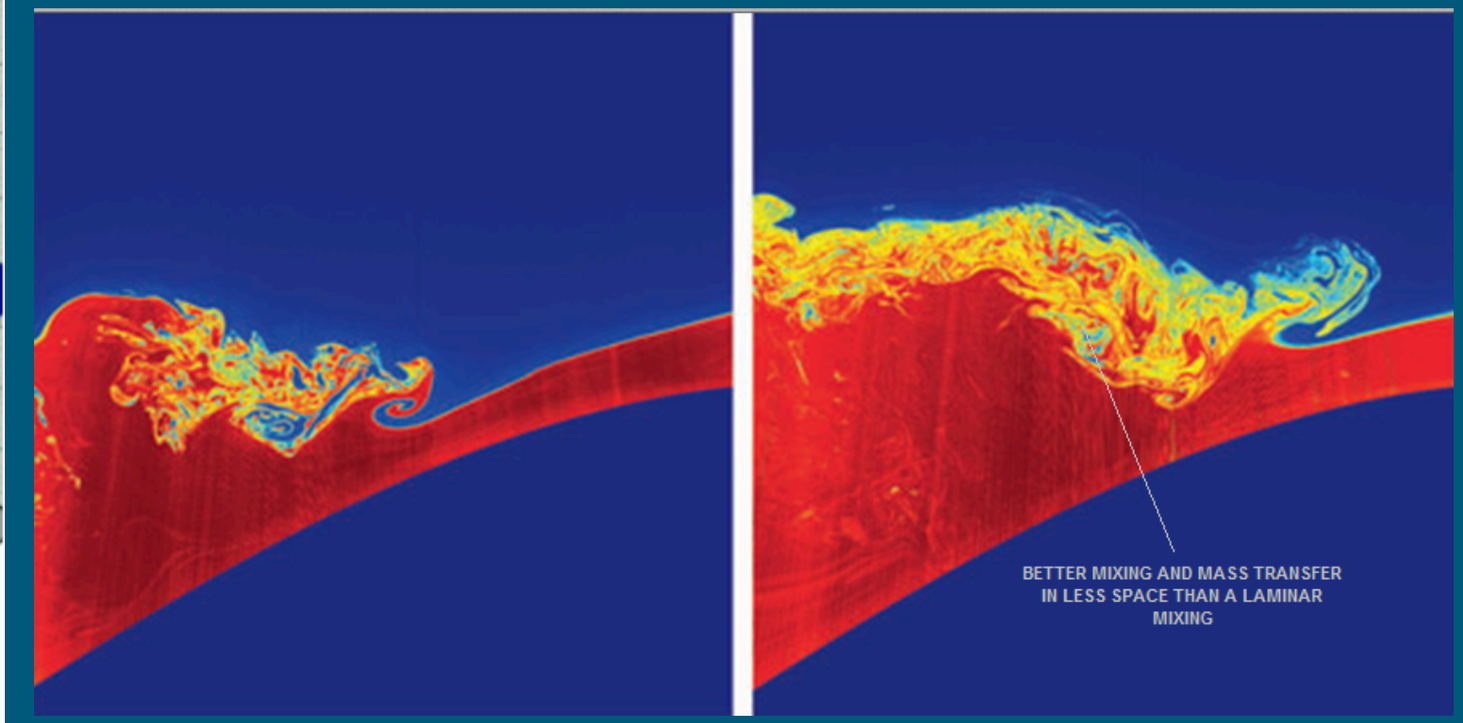

What is an injector?

*An **injector/ejector** is a pump-like device that uses the Venturi-effect of a converging-diverging nozzle to convert the pressure energy of a motive fluid to velocity energy which creates a low pressure zone that draws in and entrains a suction fluid.*

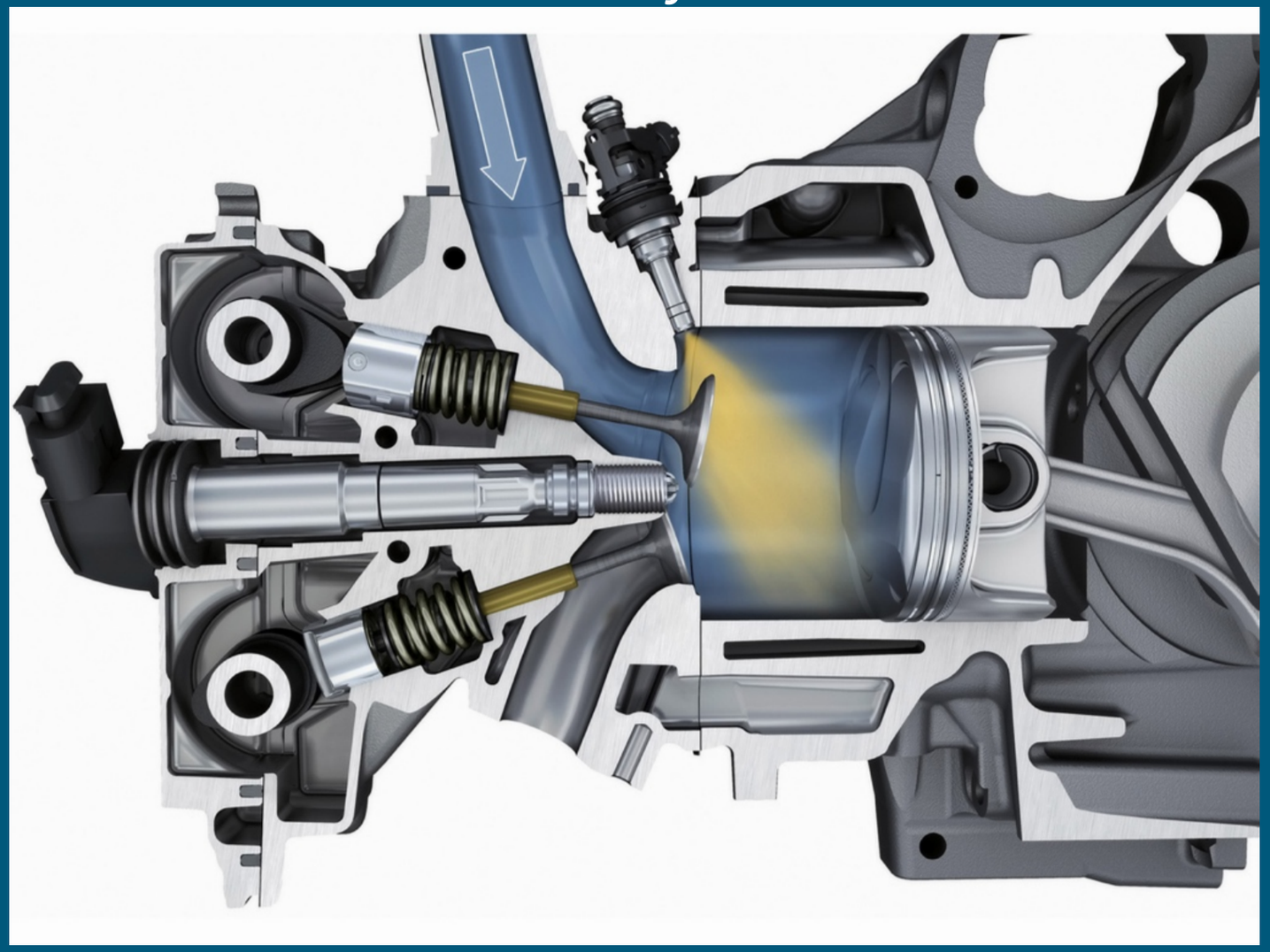

If we mix these two concepts…

TURBULENT MIXING INJECTORS

Technical Realisation:

By placing some little obstacles in the nozzle of the injectors or in its divergent section

RESULTS

Lower amount of fuel to embark

Smaller combustion chamber

Lighter engine

Global enhanced combustion

Global enhanced engine efficiency

RESUMING...

Biofuels: GREEN PROPELLANTS

Own advantages
lower price
big availability
multiple energy sources

Technical solutions introduced
Add. Biofuel Container
Turb. mix. injectors

GLOBAL RESULTS

Less Jet-fuel to use

Greener solution for air

More efficient ATS

Very *alternative* origin

GHG emissions reduced

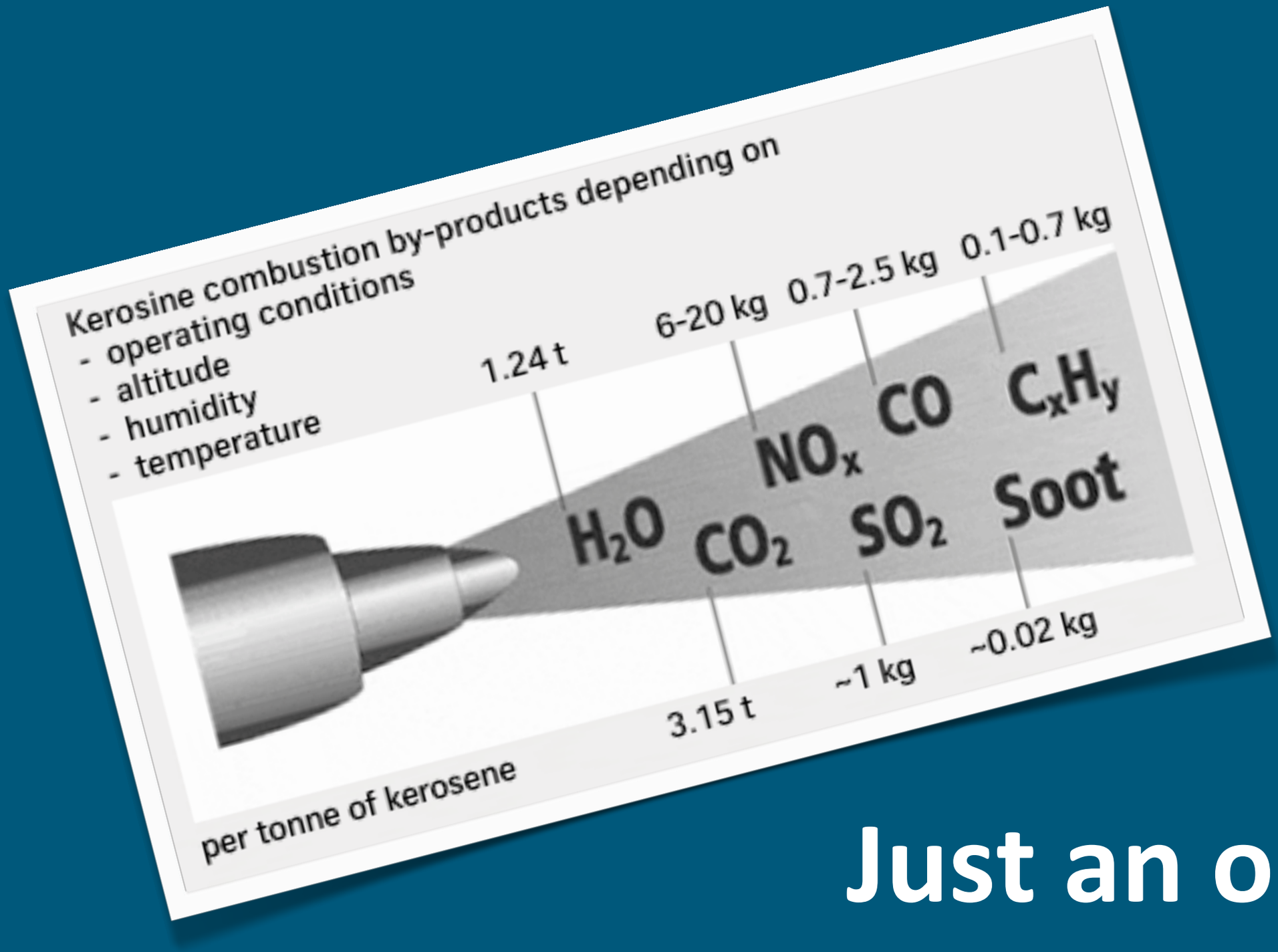

Just an old memory?

TOWARDS THE FUTURE...

...A PROSPECTIVE TIMELINE OF INNOVATION

- Modification of the fuel equipment
- Turbulent mixing injectors
- Blended-wing-body aircraft structure

...A GLANCE TO THE INNER (?) FUTURE

If we consider the ***noise issue:***

THE DESIGN BECOMES MORE COMPLEX

The most important sources of noise in an aircraft are:

How can we mitigate these bad effects?

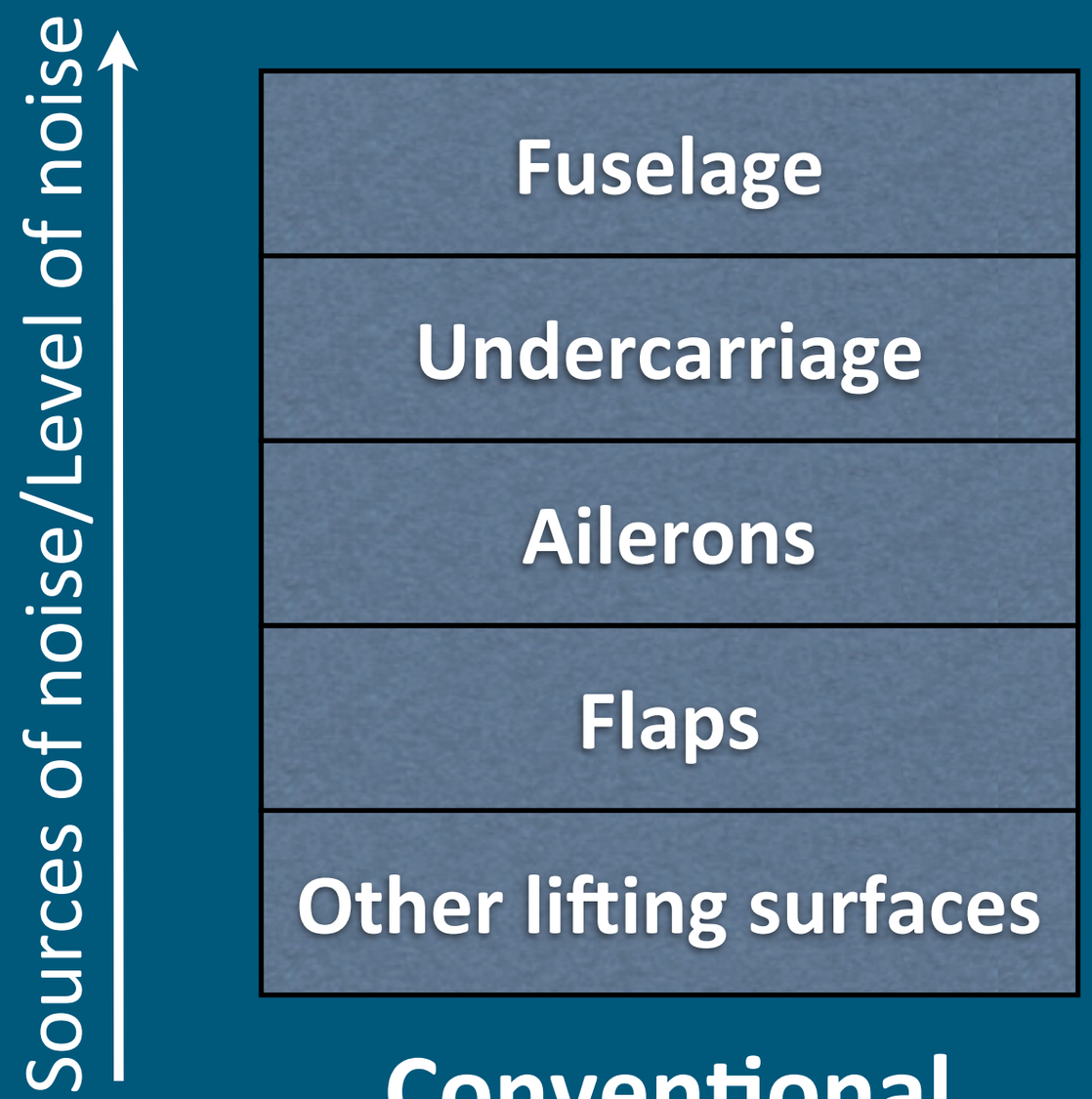

Conventional aircraft

Blended-Wing-Body aircraft

Exploitation of the "Northrop wing concept"

Advantages:

- Bigger lifting surface
- ***Lower drag*** due to the absence of the fuselage
- ***Lower amount of fuel to embark*** to win the drag

- ***Lower pollution level*** due to lower emissions of GHGs
- ***Enhanced ATS performances*** due to the idea of **TOTAL LIFTING BODY**

Conclusions

Usage of biofuels

Main objective: Mitigation of pollution and independence from fossil-fuel issues

Technical Improvements

- Fuel equipment
- Engine
- Body structure

Other different issues

- Material science
- Safety
- Economic return

Where the research should point at?

To involve State Authorities in the safety issues

Better agreements among airports and Air Companies

Where the research should point at?

To start massive experimentation on conventional flights

To examine new suitable feedstocks to avoid risks of exhaustion

To analyze new renewable sources of energy to use

Acknowledgements

ESA - European Space Agency

"Sapienza" - University of Rome

ENAC - National Agency for Civil Aviation

Thank you!