Stress-Corrosion Cracking Assessment in Spacecraft Propulsion Systems

T. Ghidini, G. Bussu**, T. de Rooij*,T. Rohr*, M. van Eesbeek*, M. Nikulainen**

**ESA, European Space Agency, Product Assurance and Safety Department, Materials and Processes Division*

***ESA, European Space Agency, Product Assurance and Safety Department*

San Diego
18-20 November 2008

Scope

- Introduction to Stress Corrosion Cracking (SCC)
- SCC in spacecraft propulsion systems
- Prevention of SCC failures
- ESA Fracture Mechanics and SCC Testing Capabilities
- Case Study on SCC Testing, the Rosetta experience
- Impact of Sustainability
- Conclusions

Introduction to Stress Corrosion Cracking

- Stress Corrosion Cracking (SCC) is a failure phenomenon which occurs in engineering metallic materials by slow environmentally induced crack propagation
- SCC is a very insidious phenomenon since cracks can initiate and propagate with little outside evidence of corrosion
- SCC is a complex phenomenon and in many cases its mechanisms have not been fully understood

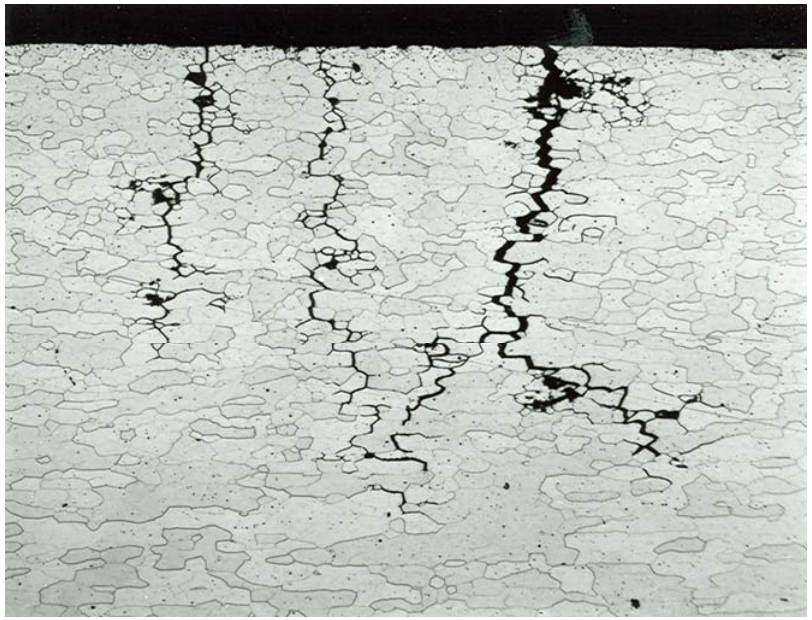

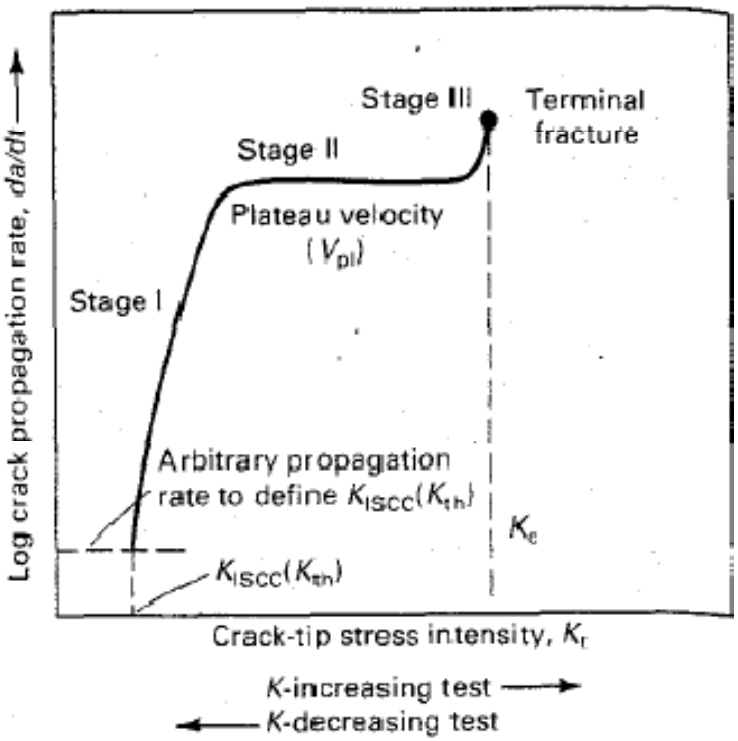

Introduction to Stress Corrosion Cracking

What is needed for stress corrosion cracking to occur:

- The material is susceptible to stress corrosion
- The presence of a corrosive environment
- The presence of a sustained tensile stress (residual or applied)

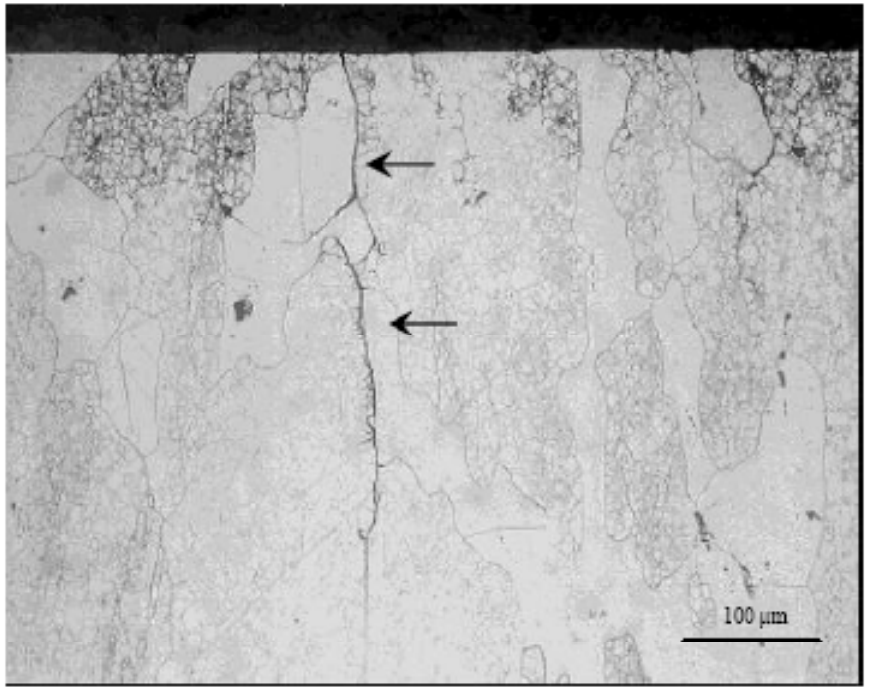

SCC in Space Propulsion Systems

Stress Corrosion Cracking in Space Propulsion Systems:

- The first documented case of SCC failure in propulsion components can be traced back to 1965 with the failure of a pressurized Ti-6Al-4V tank containing liquid N_2O_4

- Propulsion systems, in particular tanks are exposed to extremely reactive and aggressive fluids, such as fuels, oxidizers, cleaning agents which can promote SCC
- Significant residual stresses due to welding or machining processes could be still present in the tank even after stress relief heat treatment
- Significant stresses due to the tank pressurization are present in-service

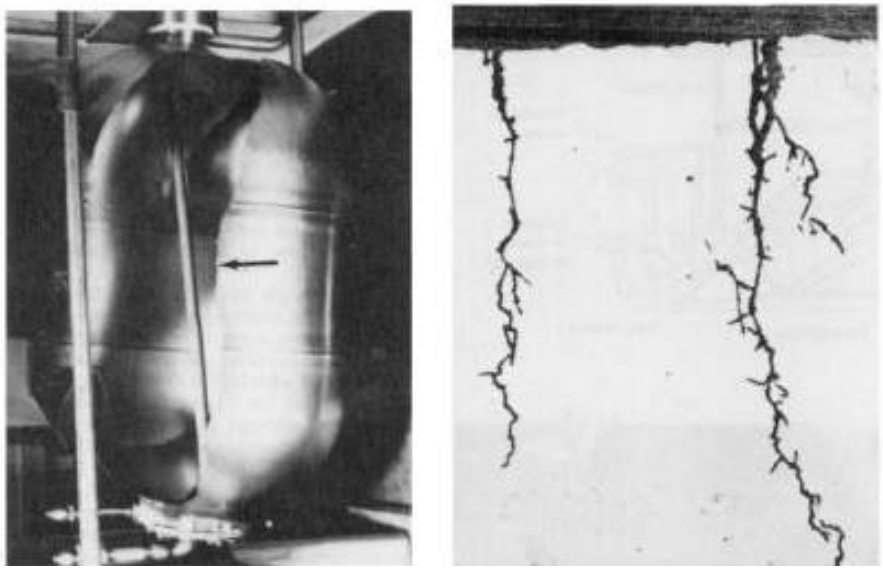

Prevention of SCC Failures

Prevention of SCC Failures and characterization of materials:

Smooth specimens testing:

- Standardized in agreement with NASA (ECSS-Q-70-36 and 37/NASA MSFC-STD-3029)
- General purpose SCC testing and classification (3 tables)
- Alternate immersion in salt water under constant load (75% of yield)
- Simple and not expensive
- Relevant to humid environment
- Non related to fracture mechanics
- Databases exist (ESA/NASA)

Fracture mechanics based testing:

- Non standardized
- Specific applications and environment
- Based on fracture mechanics (K_{ISCC})
- Expensive and it requires high level of expertise
- No database exists
- Lack of published data
- Dedicated test facility
- Test fluid contamination problem
- Health and safety issues

ESA Fracture Mechanics and SCC Testing Capabilities

Fracture mechanics based testing:

ESA-DLR Test Facilities are used to perform the following tests according to ECSS-Q-70-45A:

- Fatigue, S-N Curves
- Static properties
- Fatigue Crack Growth Threshold
- Fatigue Crack growth Curves
- Fracture Toughness

ESA Fracture Mechanics and SCC Testing Capabilities

Fracture mechanics based testing:

- The data generated with the test facility are then implemented in the software ESACRACK used for structural justification
- The Software is maintained by ESA TEC-MCS Structural department and the activity presented are performed in close collaboration with this department
- NASA JSC/ESA-ESTEC reciprocal Fracture Control agreement for safety certification of fracture control of Shuttle payloads and Space Station payloads

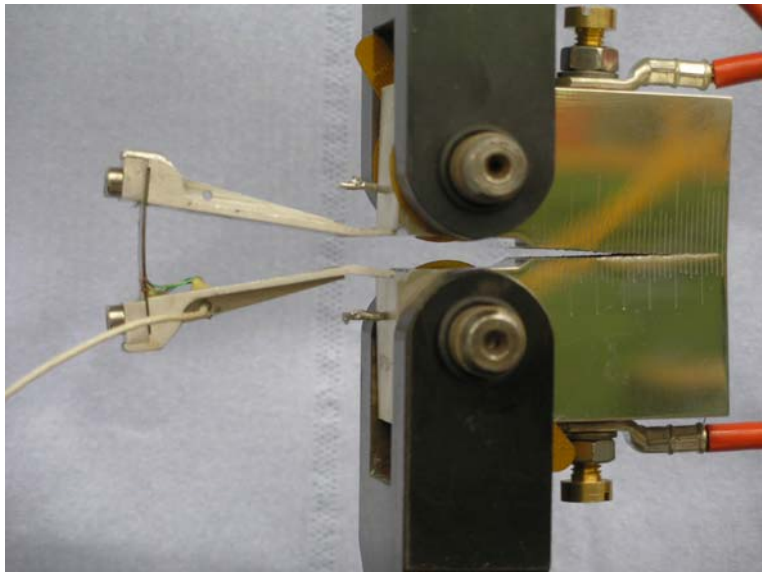

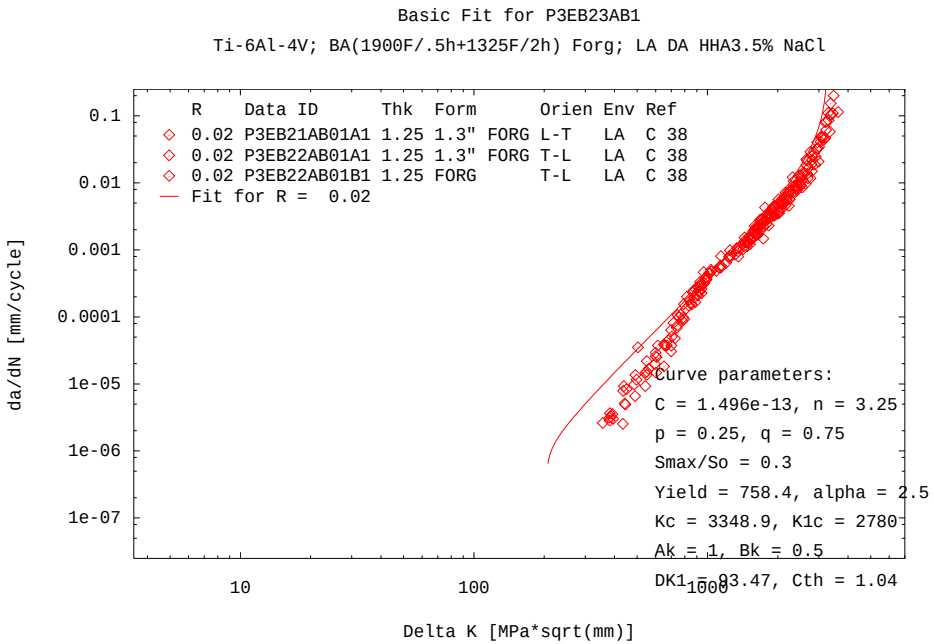

13 Feb 2008, NASGRO(R) v5.20 , Copyright(c) 2008 SwRI(R). All rights reserved.
This version of NASGRO(R) is limited to official NASA, ESA, and FAA business only. All otl

ESA Fracture Mechanics and SCC Testing Capabilities

Fracture mechanics based testing:

ESA-DLR Test Facilities are able to perform fracture mechanics testing in aggressive environment, in particular:

- Static Properties
- K_{ISCC}, Stress Corrosion Cracking Threshold stress intensity factor
- Fatigue Crack Growth Threshold
- Fatigue Crack Growth Curves
- Fracture Toughness

Fatigue Crack Growth of Ti-6-Al-4 in MMH environment

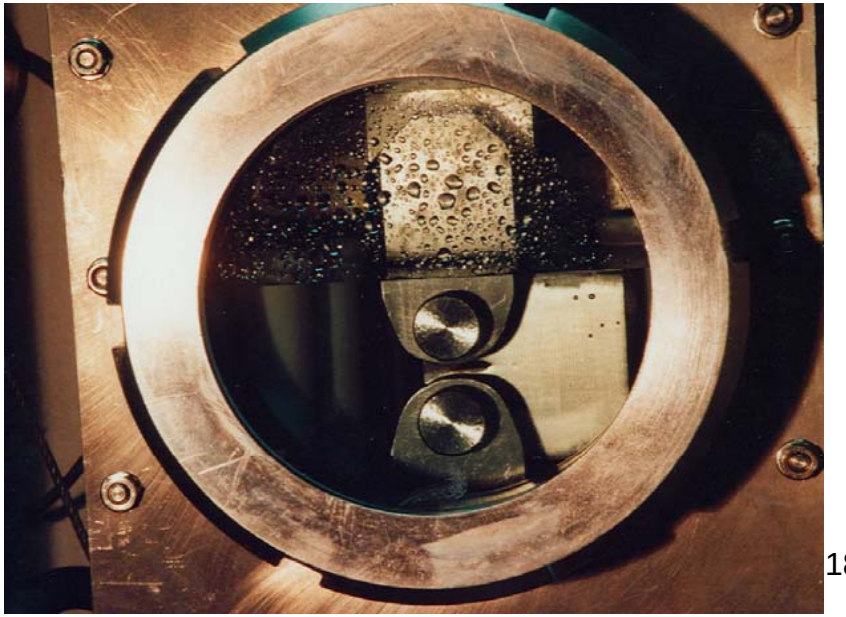

K_{ISCC} testing of Ti-6-Al-4 in MON-1 environment (6 samples tested simultaneously

ESA Fracture Mechanics and SCC Testing Capabilities

Fracture mechanics based testing:

In particular ESA SCC Test Facilities are used to perform the following:

- K_{ISCC}, Stress Corrosion Cracking Threshold stress intensity factor in 12 frames simultaneously (will increase to 18). This value is than compared to K_{Ith} obtained in air and with the K_{IC} of the material
- Pre-cracked tank wall samples can be tested in toxic environment (both in the gaseous as well as liquid phase)
- Loading is monitored with load cells during the all test duration (sometimes even months), the environment can be constantly chemically checked (making sure that no contamination happened) and the specimens can be visually inspected (glass cells)
- During testing it is possible to simulate stresses and chemical environment of a tank during emptying, decontamination and refilling

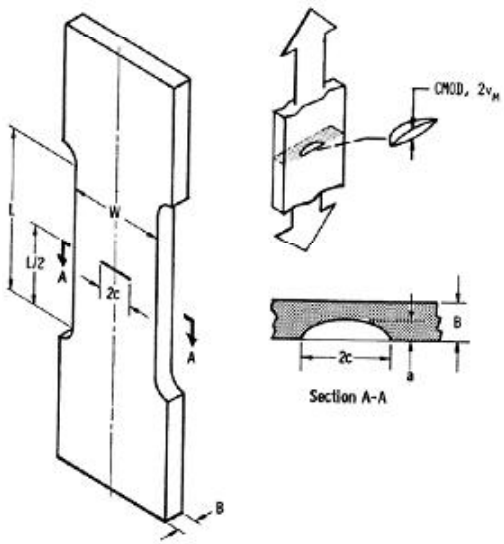

The K-calculations were performed with the formulae given in ASTM standard E 740-03

ESA Fracture Mechanics and SCC Testing Capabilities

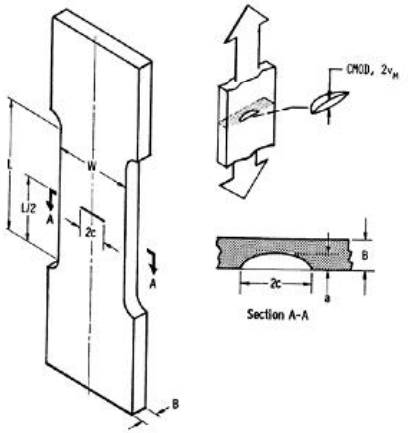

The K-calculations were performed with the formulae given in ASTM standard E 740-03

MON-3 and flushing water supply bottles

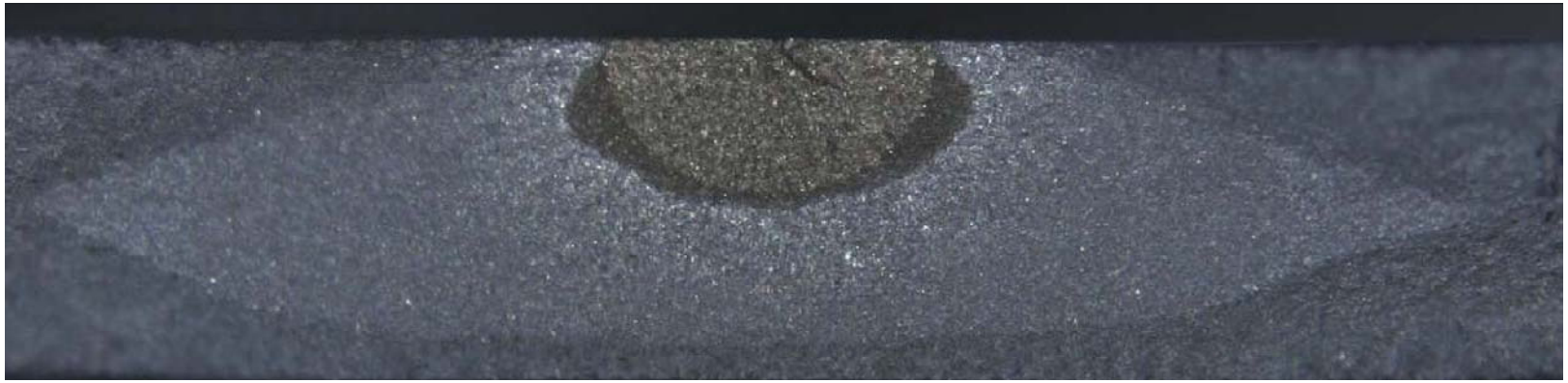

ESA Fracture Mechanics and SCC Testing Capabilities

Summary of SCC test activities performed at ESA:

SCC Test activity	Objective	Description	Intended application
Ti-6Al-4V in IPA	Assess possible SCC susceptibility of Ti-6Al-4V in IPA	Slow strain rate and K_C testing, effect of water contamination	Ti-6Al-4V propulsion components exposed to IPA, materials data
Ti-6Al-4V in pure N_2O_4	Characterise material behaviour under defined test conditions in terms of K_{ISCC} and K_{Ith}	Slow strain rate and K_c testing, effect of water contamination	N_2O_4/MON-1 Ti-6Al-4V tanks (Rosetta), materials data
Simulation of NTO MON-1 tank off/re-loading	Assess possible SCC damage on pre-cracked samples due to chemical modifications during tank off/re-loading	Representative stress and exposure history on parent and laser beam welded specimens	Rosetta MON-1 Ti-6Al-4V tanks
Ti-6Al-4V in HNO_3	Characterise material behaviour under defined test conditions in terms of K_{ISCC} and K_{Ith}	Constant load testing of parent and laser beam welded specimens in 20% HNO_3 water solution	N_2O_4/MON-1 Ti-6Al-4V tanks (Rosetta), materials data
Ti-6Al-4V in N_2O_4	Characterise material behaviour under defined test conditions in terms of K_{ISCC} and K_{Ith}	Constant load testing of parent and welded samples in N_2O_4	N_2O_4/MON-1 Ti-6Al-4V tanks (Rosetta), materials data
Ti-6Al-4V in Hydrazine	Characterise material behaviour under defined test conditions for mission optimization	Constant load testing of parent and welded samples at temperatures btw 90 and 100C	Hydrazine Ti-6Al-4V tanks, materials data

Case Study on SCC Testing, the Rosetta Experience

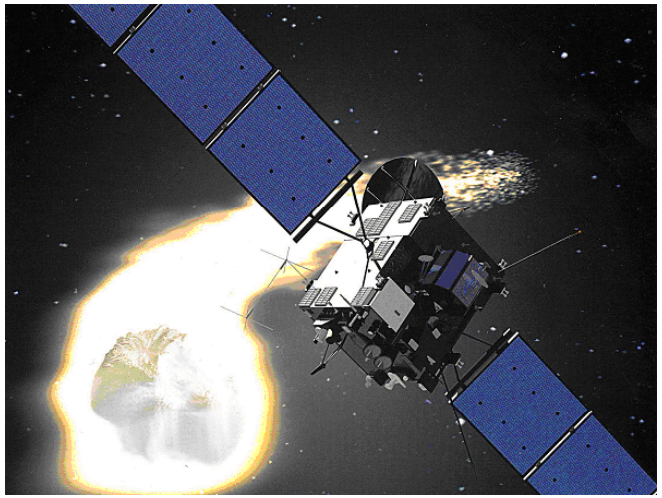

ESA Rosetta Satellite:

Mission: after entering orbit around Comet 67P Churyumov-Gerasimenko in 2014, the spacecraft will release a small lander onto the icy nucleus of the comet, then spend the next two years orbiting the comet as it heads towards the Sun.

Main structure: 2.8 x 2.1 x 2.0 metres Diameter of solar arrays 32 metres

Launch mass: total 3,000 kg (approx.) Propellant 1,670 kg (approx.) Science payload 165 kg Lander 100 kg SA output 850 W at 3.4 AU, 395 W at 5.25 AU

Propulsion subsystem: 24 bipropellant 10N thrusters

Operational mission: 12 years

Case Study on SCC Testing, the Rosetta Experience

Major facts:

- Rosetta was due to launch in January 2003. Its launch was put on hold after Ariane 5 experienced a defective orbit injectioin in December 2002
- During this stand-by period the satellite was stored with its Ti-6Al-4V alloy tanks filled with MON-1 (N_2O_4 with 0.7-1.0% NO)
- For safety reasons it was decided that the tanks should be unloaded
- If the tank had to be unloaded, inevitable chemical modifications of the propellant would have exposed the titanium alloy walls to the risk of SCC. The risk was associated with the possible formation of NO-lean N_2O_4 and HNO_3 caused by contamination with water during N_2 flushing
- No sufficient and reliable data were available to allow the realistic assessment of such a risk

Case Study on SCC Testing, the Rosetta Experience

ESA approach:

- The presented ESA SCC test facility has been successfully used to validate an emptying-decontamination-refilling procedure developed (in close collaboration with the TEC-MPC propulsion department) for minimising the risk of SCC in the Rosetta tank
- Pre-conditioned base and welded material were subjected to 72 exposure to SCC testing in HNO_3 20% water solution and NO-lean N_2O_4-MON1
- The findings indicated that, had the Rosetta NTO MON-1 tanks been emptied, decontaminated and refilled by applying the developed procedure, no damage of the tanks caused by SCC would have occurred
- On 2nd March 2004 Rosetta was successfully launched on Ariane5 and it has recently sent pictures of its fly-by of asteroid Steins

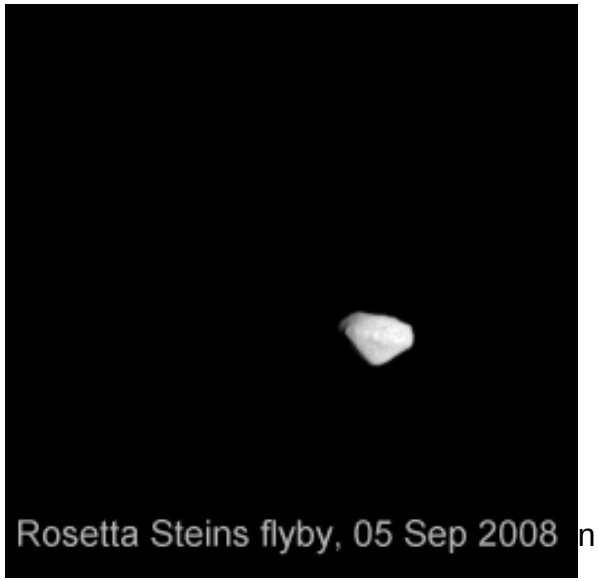

Impact of sustainability

- Chemical Propulsion is essential for putting a satellite to its designated orbit
- Propellants and oxidizers (typically MMH, UMDH, N_2O_4) used till now are extremely hazardous
- In recent years, there has been ever-increasing interest in space propellants that are environmentally friendly (Green propellants) and contribute towards non-toxic propellants. These propellants are generally easier and safer to handle than conventional propellants, and are expected to drive down the costs associated with propellant transport and storage, and in spacecraft development and on-ground operations. In Europe, all of these factors have made non-toxic propellants more desirable, especially when applied to low-cost micro-satellite missions and future reusable vehicles
- ESA TEC-MPC propulsion department is investigating green monopropellant

Impact of sustainability (Cont'd)

- Sustainable development and related regulations (e.g. RoHS, REACH) may have large impact on availability of materials, processes, components but also on cleaning agents, propellants, propellant simulants
- Freon 113 and SOLREM were used as propellant simulant during vibration testing of tanks since they had comparable mass w. r. t. MON
- However, because of the ozone depletion potential of these compounds, their production and/or use was banned requiring users to find a new alternative
- A solution has been identified by the European Industry in the HFE-7100 Cleaning Agent which will be used both for cleaning as well as for propellant mass simulation
- Vibration testing is performed at system level in pressurized condition and can also mean a long exposure of the tank to the environment
- Since the fluid is not only used as a cleaning agent but also in pressurized condition the possibility exists that after testing residuals of the fluid could get in touch with propellant

Impact of sustainability (Cont'd)

- ESA has then taken the lead in defining and performing a SCC test campaign to confirm compatibility of the cleaning agent with tank materials
- ESA SCC test facility will be used to perform extensive stress corrosion cracking campaign using two common Titanium alloys for tank application by exposing them to HFE-7100 environment (test Duration one Month):
  - Ti 15-3-3-3
  - Ti-6Al-4V
  - Both alloys in base and welded condition
  - Also dissimilar joints will be test
- Moreover the possibility of having HFE-7100 entrapped in cracks and then exposed to propellants will be tested as well, to investigate potential risk of the creation of reaction products which could lead to SCC

Conclusions

- Spacecraft materials are selected based on their resistance to stress corrosion cracking
- ESA has engaged in test programs carried out in dedicated test facilities and investigating the susceptibility to SCC of materials used in spacecraft propulsion components
- Since “green” doesn’t necessarily mean “compatible” with spacecraft materials dedicated test campaigns have to be performed also with the sustainable cleaning fluids and propellants
- ESA SCC test facility will be used to perform extensive stress corrosion cracking campaigns in supporting the application of the sustainable fluids by guarantying safety

Acknowledgments

The test activities discussed in the present work were performed under ESA contract by DLR Cologne and Lampoldshausen (D), NLR (NL), GKSS (D). Their professional hard work and high level of technical expertise is gratefully acknowledged.